ULINE H-9884, H-9885
H-9886

BALANCE SCALE

1-800-295-5510
uline.com

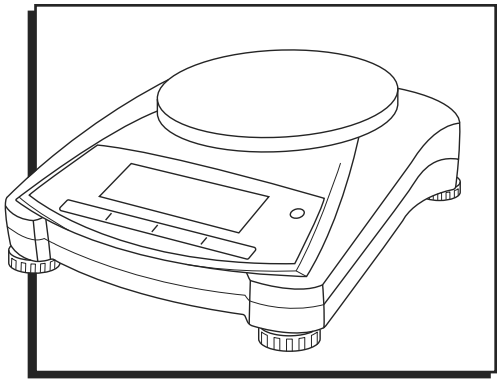

OVERVIEW OF CONTROLS

CONTROL PANEL

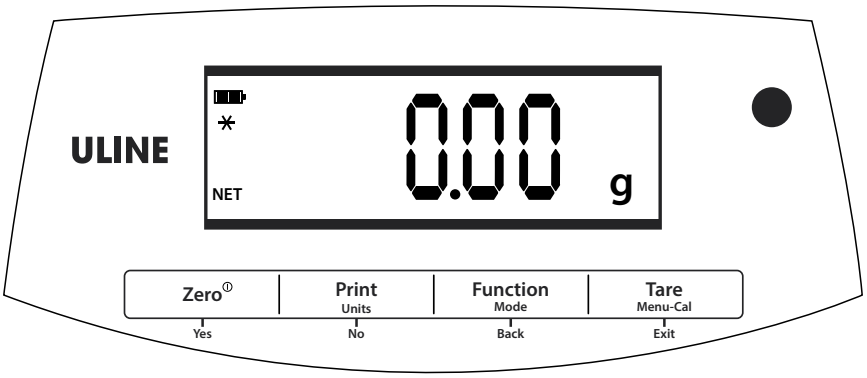

CONTROL FUNCTIONS

BUTTON	FUNCTION
Zero Yes	Short Press (when on): Sets display to zero. (when off): Turns scale on. Long Press (when on): Turns the scale off. Short Press (in Menu): Selects/accepts displayed setting.
Print Units No	Long Press: Toggles through active units. Short Press (in Menu): Toggles through available settings.
Function Mode Back	Short Press: Selects function setting. Long Press: Selects active mode. Short Press (in Menu): Returns to previous settings.
Tare Menu-Cal Exit	Short Press: Enters/clears a Tare value. Long Press: Enters user menu. Short Press (in Menu): Quickly exits user menu.

SAFETY

WARNING! Read all safety warnings before installing, making connections or servicing this scale. Failure to comply with these warnings could result in personal injury and/or property damage. Retain these instructions for future reference.

- **Verify that the AC adapters input voltage range and plug type are compatible with the local AC mains power supply.**
- **Position the instrument so that the AC adapter can be easily disconnected from the wall socket.**
- **Position the power cord so that it does not pose a potential obstacle or tripping hazard.**
- **Operate the unit only under ambient conditions specified in these instructions.**
- **Scale is for indoor use only.**
- **Do not operate in hazardous or explosive environments.**
- **Only use in dry locations.**
- **Only use approved accessories and peripherals.**
- **Disconnect from power supply when cleaning.**
- **Service should only be performed by authorized personnel.**

SETUP

TRANSPORTATION LOCK

1. Rotate the pointer on the transportation lock to the unlocked position. (See Figure 1)

NOTE: Transportation lock is located on underside of scale.

Figure 1

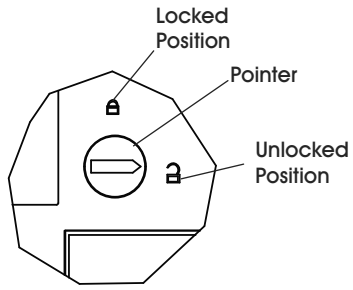

LOCATION

NOTE: Use on a firm, steady surface.

NOTE: Avoid locations with excessive air current, vibrations, heat sources or rapid temperature changes.

1. Adjust the leveling feet so level bubble is centered in circle. (See Figure 2)

Figure 2

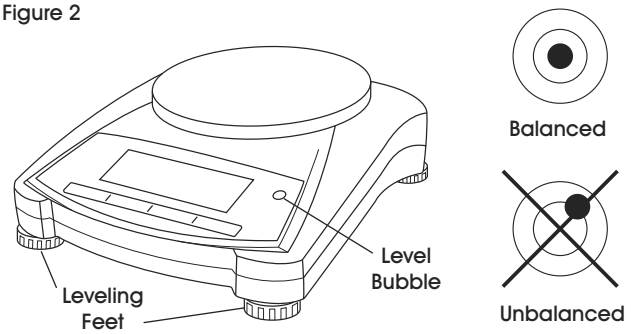

CONNECTING POWER

BATTERY

1. Remove battery cover and install four C batteries using the polarity indications as shown in the battery compartment. (See Figure 3)

AC ADAPTER

NOTE: The AC adapter is used to power the balance when battery power is not needed.

2. Connect the AC adapter plug to the input jack. (See Figure 3)

Figure 3

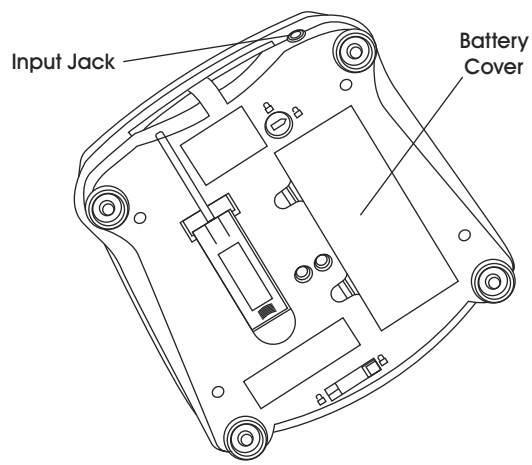

3. Connect AC adapter (supplied) to the proper AC supply.

OPERATION

CALIBRATION

1. Press and hold **MENU-CAL** until MENU is displayed. When button is released, the display will show CAL.
2. Press **YES** to accept; SPAN will be shown. Press **YES** again to begin span calibration.
3. --C-- will blink while zero reading is stored. The display will show the calibration weight value. Place the specified weight value on the pan. --C-- will blink while the reading is stored.
4. The scale will return to the previous application mode and is ready for use.

WEIGH MODE

1. Press and hold **MODE** until WEIGH is displayed.
2. If required, place an empty container on the pan and press **TARE.**
3. Add material to the pan or container. The display will show the weight of the material.

PARTS COUNTING MODE

NOTE: This mode counts large numbers of items based on the weight of a reference count.

1. Place an empty container on the pan and press **TARE**.
2. Press and hold **MODE** until COUNT is displayed. CLr.APU (Clear Average Piece Weight) will then display.
3. Press **NO** to use the stored Average Piece Weight (APW) or press **YES** to establish a new APW.

NOTE: If choosing NO to use stored APW, skip to step 6.

NOTE: If choosing YES to set a new APW, continue to step 4.

NOTE: Press FUNCTION to view the current APW.

NOTE: To clear the stored APW, press and hold MODE until COUNT is displayed. Press YES when CLr.APU is displayed.

4. After pressing yes, the scale will then display the stored sample size. Press **NO** or **BACK** to toggle the choices 5, 10, 20, 50 or 100.
5. Put the indicated number of pieces on the pan. Press **YES** to calculate the APW. The display will show the piece count.
6. Add additional pieces until the desired count is reached.

CHECKWEIGH MODE

NOTE: This mode sets low and high weight limits for portion control processes.

1. Press and hold **MODE** until CHECK is displayed. CLr.rEF (Clear References) will then display.
2. Press **NO** to use the stored reference weight limits or press **YES** to establish new reference values. (Skip to step 5)

NOTE: If choosing NO to use stored reference wight limits, skip to step 5.

NOTE: If choosing YES to set new reference weight limits, Continue to step 3.

NOTE: Press FUNCTION to view low and high reference weight limits.

To clear the stored reference values, press and hold MODE until CHECK is displayed. Press YES when CLr.rEF is displayed.

3. The balance will then display SET. Lo. Press **YES** to view the "Low" limit value. Press **YES** to accept or **NO** to edit the "Low" limit value. The stored value displays with the first digit highlighted 000.000 kg. Repeatedly press **NO** until the desired number appears. Press **YES** to accept and highlight the next digit. Repeat until all the digits are correct. Press **YES** to accept the "Low" limit value; SET. HI will be displayed.
4. Repeat steps 1-3 to accept or edit the "High" value.
5. Place sample material on the pan. The "Accept" indicator will show that the sample weight is within the acceptable range.

USER MENU

NOTE: The user menu allows the customizing of scale settings.

NOTE: All modes except for weighing must be activated in the user menu before they are available.

Sub - Menus	.C.a.l.	.S.e.t.u.p.*	.M.o.d.e	.U.n.i.t.*	.E.n.d
Menu Items	Span LIN End	b.light A-OFF Filter AZT Stab Stab.C End	Count Check End	g, kg, N oz, ozt, dwt lb, lb:oz, ct grain End	

1. Press and hold **MENU** until MENU is displayed. When released, the first sub-menu (.C.A.L.) will be shown.
2. Press **YES** to enter the displayed sub menu or press **NO** to advance to next.
3. Press **YES** to view the menu item setting or press **NO** to move to the next menu item. When viewing the setting, Press **YES** to accept the setting or **NO** to change the setting.
4. When End is displayed, press **YES** to return to the sub-menu selections or **NO** to return to the first item in the current menu.

CALIBRATION SUB-MENU

- Span [SPAN] (yes, no) – Initiates a span calibration procedure (zero and span). A span calibration is important when initially setting up the scale.
- Lin [LIN] (yes, no) – Initiates a linearity calibration procedure (zero, mid-point and span).

SETUP SUB-MENU

- Back Light [b.L ight] (on, off, AUTO) – When Back light is set to "ON", the scale will always be on.
- Back Light [b.L ight] Auto – The scale will turn on when a button is pressed or the display weight changes.
- Auto Off [A-OFF] (on, off) – When Auto Off is set to "ON," the scale will turn off automatically after five minutes of inactivity. Auto Off is used to save battery power.
- Filter [FILTER] (L1, L2, L3, L4) – Set the amount of signal filtering.

	L1 L4
Stability	Less ---------- Greater
Stabilization Time	Faster---------- Slower

- Auto Zero Tracking [AZT] (OFF, 0.5d, 1d, 3d, 5d, 8d, 10d) – Set the automatic zero tracking functionality. The display will maintain zero until a change of 0.5d, 1d, 3d, 5d, 8d, or 10d divisions per second has been exceeded.
- Stable [STAB] (0.5d, 1d, 2d, 5d) – Set the amount the reading can vary while the stability symbol remains on.
- Stable Compensation [STAB.C] (on, off) – Set the automatic stable tracking functionality. Set it to "OFF" for dosing or filing application.

SETTINGS CONTINUED

MODE MENU

NOTE: This sub-menu activates modes so they will be available for use with the MODE button. Weigh mode is always active.

- Parts Count [COUNT] (on, off) – Set to "ON" for the mode to be active.
- Check Weigh [CHECK] (on, off) – Set to "ON" for the mode to be active.

UNITS MENU

NOTE: This sub-menu activates units so they will be accessible with the UNITS button. The units in the menu must be turned on to be active.

NOTE: Available units and modes vary by model and local regulations.

SECURITY SWITCH

- Menu Lock switch may be used to limit changes to the user menu. (See Figure 4)

Figure 4

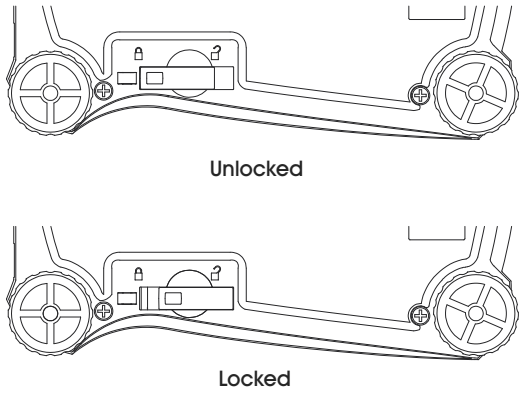

- The switch may set some scale settings as required by the approval agency.
- The switch may be secured using paper seals, wire seals or plastic ties.

MAINTENANCE

WARNING! Electric shock hazard. Disconnect the equipment from the power supply before cleaning.

ATTENTION! Do not use solvents, harsh chemicals, ammonia or abrasive cleaning agents.

- Clean the main housing with a damp cloth and mild detergent, if necessary.

TROUBLESHOOTING

OPERATING ISSUE	POSSIBLE CAUSE	REMEDY
Cannot turn on	No power to scale.	Verify connections and voltage.
Poor accuracy	Improper calibration. Unstable environment.	Perform calibration. Move scale to suitable location.
Cannot calibrate	Unstable environment. Incorrect calibration weight.	Move scale to suitable location. Use correct calibration weight.
Cannot access mode	Mode not enabled.	Enter menu and enable mode.
Cannot access unit	Unit not enabled.	Enter menu and enable unit.
Lo rEF	Reference weight is too low.	Increase reference weight.
rEF Err	Parts counting – sample weight < 1d.	Shows error, exits mode or goes to Clr.APU.
Err 3.0 CAL	Incorrect calibration weight.	See Calibration on page 3.
ERR 4.4 FuLL	RS232 Buffer is full.	Set Handshake on, see Interface User Manual.
Err 8.1 LoAd	Power on zero range exceeded.	Clear pan; check shipping lock setting.
Err 8.2 LoAd	Power on zero under range.	Install pan; check shipping lock setting.
Err 8.3 LoAd	Overload.	Load exceeds scale maximum capacity.
Err 8.4 LoAd	Under load.	Reading below min. range; re-install pan.
Err 8.6 999999	Displayed value > 999999.	Result exceeds display capability.
Err 9 dAtA	Internal data error.	Contact Uline Customer Service.
Err 13 MEM	Fail to write EEPROM.	Contact Uline Customer Service.
Err 53 CSUM	Invalid checksum data.	Contact Uline Customer Service.

If troubleshooting section does not resolve or describe problem, contact Uline Customer Service at 1-800-295-5510.

TECHNICAL DATA

EQUIPMENT RATINGS

- Pollution degree 2
- Installation category II
- Altitude 2000m
- Humidity: Maximum 80% for temperatures up to 88˚F decreasing linearly to 50% at 104˚F non-condensing
- Electrical supply: Rated 12VDC 500mA for use with a certified/listed power adapter, or battery operated
- Indoor use only
- Temperature range: 50˚F to 104˚F
- The main supply voltage fluctuations are not to exceed ± 10% of the nominal supply voltage.

SPECIFICATIONS

MODEL	H-9884	H-9885*	H-9886*
Capacity (g)	220	2200	2200
Readability (g)	0.01	0.01	0.1
Repeatability (Std. Dev)	1d	2d	1d
Linearity	±2d	±5d	±2d
Span Calibration Mass (Not Included)	200	2,000	1,000
Linearity Calibration Mass	100 g, 200 g	1 kg, 2 kg	1 kg, 2 kg
Stabilization Time(s)	1	2	1
Construction	ABS housing & stainless steel pan		
Draftshield	No		
Calibration	User-selectable external span or linearity calibration/Digital with external weight		
Tare Range	Full capacity by subtraction		
Weighing Unit	g, N, oz, ozt, dwt, ct, grain		
Application Modes	Weighing, Parts Counting, Checkweighing		
Power Requirement	AC adapter (included) or four C batteries (not included)		
Typical Battery Life	270 hours	200 hours	270 hours
Specified Temperature Range	50˚F to 104˚F at 10% to 85% relative humidity, non-condensing		
Storage Conditions	-4˚F to 131˚F at 10% to 90% relative humidity, non-condensing		
Communication	RS232, USB or Ethernet (available as accessories)		
Display Type	Liquid Crystal Display (LCD) with backlight		
Display Size	0.78 in / 20 mm digits		
Pan Size (W x D)	5.7 in / 145 mm diameter	7.5 x 5.7 in / 190 x 144 mm	
Scale Dimensions (W x D H)	8 x 9.1 x 2.8 in / 204 x 230 x 70 mm		
Shipping Dimensions (W x D x H)	11.8 x 9.8 x 5.3 in / 300 x 250 x 134 mm		
Net Weight	2.2 lb / 1.0 kg		
Shipping Weight	3.3 lb / 1.5 kg		

*Also kg, lb, lb:oz convertible

SPECIFICATIONS (CONTINUED)

MODEL	H-9884	H-9885	H-9886
Gram (g)	220 x 0.01	2,200 x 0.01	2,200 x 0.1
Kilogram	----------	2.2 0.00001	2.2 x 0.0001
Newton (N)	2.1574 x 0.0001	21.5744 x 0.0001	21.574 x 0.001
Ounce (oz)	7.7600 x 0.0005	77.6025 x 0.0005	77.600 x 0.005
Ounce Troy (ozt)	7.0730 x 0.0005	70.7315 x 0.0005	70.730 x 0.005
Pennyweight (dwt)	141.46 x 0.01	1,414.63 x 0.01	1,414.6 x 0.1
Pound (lb)	----------	4.85015 x 0.00005	4.8500 x 0.0005
Pound:Ounce (lb:oz)	----------	4lb:13.603 oz x 0.0005 oz	4lb:13.600 oz x 0.005 oz
Carat (ct)	1,100 x 0.05	11,000.0 x 0.05	11,000 x 0.5
Grain (grn)	3,395.0 x 0.2	33,951.2 x 0.2	33,950 x 2