ZQ630

Mobile Printer

User Guide

ULINE H-8740

1-800-295-5510

0120 IH-8740VND

Contents

Proprietary Statements 6

Document Conventions 8

Introduction to the ZQ630 printer 9

Unpacking and Inspection 10
Reporting Damage 10
ZQ630 Technology 10
PowerPrecision+ (PP+) Battery 11
Printing Technology 12
QR Code 12
Made for iPhone (MFi) 13
Near Field Communication (NFC) 13
Color LCD Display 13
Radio-Frequency Identification (RFID) 13
RFID Calibration 15

ZQ630 Overview 16

Getting Ready to Print 18

Battery 18
Removing the Battery 18
Removing the Battery Tape Insulator 19
Installing the Battery 20
Battery Safety 21
Charger Safety 21
AC Power Adapter 22

Ethernet and Charging Cradle 23
LED Status Indicator 23
Printer Operation with Cradle 24
1-Slot Battery Charger 25
Charging Status Indicators 25
3-Slot Battery Charger 26
Loading the Media in the ZQ630 Printer 27
Loading Media Procedure 27
Loading Media in Peel-off Mode 29
Operator Controls 30
Standard Control Panel 30
Normal Boot-up LED Behavior 30
Sleep Mode LED Behavior 31
Shutdown Behavior 31
Power LED Ring Behavior 32
LCD Control Panel 33
Status Bar Icons 34
Home Menu Screen 36
Home Screen Icons and Parameters 38
Alert Messages 38
Buttons 39
Power-Up Sequences 39
Runtime Sequences without LED Flashes 40
Sleep Mode 40
Adaptive Print Performance 41
Draft Mode 41
Verify the Printer is Working 42
Printing a Configuration Label 42
Connecting the Printer 42
Cable Communication 43
RS-232C Communications 43
USB Communications 43
Providing Strain Relief for Communications Cable 44
Zebra Setup Utilities 45
Zebra Android Printer Setup Utility (for Link-OS Printers) 45
Wireless Communications with Bluetooth 46

Bluetooth Networking Overview 46
Bluetooth Security Modes 47
Bluetooth Minimum Security Modes 48
WLAN Overview 49
Setting Up the Software 50
Designing Labels 50
Using Pre-Printed Receipt Media 52
Black Mark Dimensions (Receipt Media) 52
Label Areas 52
Label Design Examples 53
Keep-Out Areas 54
Near Field Communication (NFC) 54
NFC Use Cases 55
Wearing the Printer 56
Swivel Belt Clip 56
Adjustable Shoulder Strap 57
Soft Case 58
Hand Strap 59
Hard Case 60
Waist Holster 61
Preventive Maintenance 62
Extending Battery Life 62
General Cleaning Instructions 62
LCD Control Panel Indicators 64
Troubleshooting Topics 66
Troubleshooting Tests 68
Printing a Configuration Label 68
Communications Diagnostics 68
Specifications 73
Printing Specifications 73
Memory and Communications Specifications 73
Label Specifications 74
Physical, Environmental and Electrical Specifications 74
CPCL Font and Bar Code Specifications and Commands 74
ZPL Font and Bar Code Specifications and Command 76
Communication Ports 77

ZQ630 Dimensions 79
ZQ630 Mounting Hole Dimensions 80
ZQ630 Accessories 81
Appendix A 83
Interface Cables (RS-232 Cables) 83
USB Cables 84
Appendix B 85
Media Supplies 85
Appendix C 85
Maintenance Supplies 85
Appendix D 86
Appendix E 107
Appendix F 108
Battery Disposal 108
Product Disposal 108
Appendix G 109
Using Zebra.com 109
Appendix H 111
Product Support 111

Copyright

© 2018 ZIH Corp and/or its affiliates. All rights reserved. ZEBRA and the stylized Zebra head are trademarks of ZIH Corp., registered in many jurisdictions worldwide. All other trademarks are the property of their respective owners.

COPYRIGHTS AND TRADEMARKS: For complete copyright and trademark information, go to www.zebra.com/copyright
WARRANTY: For complete warranty information, go to www.zebra.com/warranty
END USER LICENSE AGREEMENT: For complete EULA information, go to www.zebra.com/eula

Terms of Use

Proprietary Statement: This manual contains proprietary information of Zebra Technologies Corporation and its subsidiaries (“Zebra Technologies”). It is intended solely for the information and use of parties operating and maintaining the equipment described herein. Such proprietary information may not be used, reproduced, or disclosed to any other parties for any other purpose without the express, written permission of Zebra Technologies.

Product Improvements: Continuous improvement of products is a policy of Zebra Technologies. All specifications and designs are subject to change without notice. Liability Disclaimer: Zebra Technologies takes steps to ensure that its published Engineering specifications and manuals are correct; however, errors do occur. Zebra Technologies reserves the right to correct any such errors and disclaims liability resulting therefrom.

Limitation of Liability: In no event shall Zebra Technologies or anyone else involved in the creation, production, or delivery of the accompanying product (including hardware and software) be liable for any damages whatsoever (including, without limitation, consequential damages including loss of business profits, business interruption, or loss of business information) arising out of the use of, the results of use of, or inability to use such product, even if Zebra Technologies has been advised of the possibility of such damages. Some jurisdictions do not allow the exclusion or limitation of incidental or consequential damages, so the above limitation or exclusion may not apply to you.

Monotype®, Intellifont® and UFST® are trademarks of Monotype Imaging, Inc. registered in the United States Patent and Trademark Office and may be registered in certain jurisdictions. Andy™, CG Palacio™, CG Century Schoolbook™, CG Triumvirate™, CG Times™, Monotype Kai™, Monotype Mincho™ and Monotype Sung™ are trademarks of Monotype Imaging, Inc. and may be registered in some jurisdictions. HY Gothic Hangul™ is a trademark of Hanyang Systems, Inc. Angsana™ is a trademark of Unity Progress Company (UPC) Limited. Andale®, Arial®, Book Antiqua®, Corsiva®, Gill Sans®, Sorts® and Times New Roman® are trademarks of The Monotype Corporation registered in the United States Patent and Trademark Office and may be registered in certain jurisdictions.
Century Gothic™, Bookman Old Style™ and Century Schoolbook™ are trademarks of The Monotype Corporation and may be registered in certain jurisdictions.
HGPGothicB is a trademark of the Ricoh company, Ltd. and may be registered in some jurisdictions.

Univers™ is a trademark of Heidelberger Druckmaschinen AG, which may be registered in certain jurisdictions, exclusively licensed through Linotype Library GmbH, a wholly owned subsidiary of Heidelberger Druckmaschinen AG.
Futura® is a trademark of Bauer Types SA registered in the United States Patent and Trademark Office and may be registered in some jurisdictions.
TrueType® is a trademark of Apple Computer, Inc. registered in the United States Patent and Trademark Office and may be registered in certain jurisdictions.
All other product names are the property of their respective owners.

“Made for iPod”, “Made for iPhone”, and “Made for iPad” mean that an electronic accessory has been designed to connect specifically to iPod, iPhone, or iPad, respectively, and has been certified by the developer to meet Apple performance standards. Apple is not responsible for the operation of this device or its compliance with safety and regulatory standards. Please note that the use of this accessory with iPod, iPhone, or iPad may affect wireless performance.

Bluetooth® is a registered trademark of the Bluetooth SIG.

© 1996–2009, QNX Software Systems GmbH & Co. KG. All rights reserved. Published under license by QNX Software Systems Co.

All other brand names, product names, or trademarks belong to their respective holders.
©2018 ZIH Corp.

Works with:

Windows

Made for iPod iPhone iPad

Certified by:

IP 43

Wi Fi CERTIFIED

Bluetooth®

ULINE H-8740

1-800-295-5510

0120 IH-8740VND

Document Conventions

The following graphic icons are used throughout the documentation set. These icons and their associated meanings are described below.

	Caution • Warns you of the potential for electrostatic discharge.
	Caution • Warns you of a potential electric shock situation.
	Caution • Warns you of a situation where excessive heat could cause a burn
	Caution • Advises you that failure to take or avoid a specific action could result in physical harm to you.
	Caution • Advises you that failure to take or avoid a specific action could result in physical harm to the hardware.
	Important • Advises you of information that is essential to complete a task.
	Note • Indicates neutral or positive information that emphasizes or supplements important points of the main text.

Introduction to the ZQ630 printer

Thank you for choosing our Zebra® ZQ630 Mobile Printer. You will find these rugged printers will become a productive and efficient addition to your workplace thanks to their innovative design and state of the art features. Zebra Technologies is the leader in industrial printers with world-class support for all of your bar code printers, software, and supplies. This user's guide gives you the information you will need to operate the ZQ630 printer. They use some of the latest technologies such as an 802.11ac/Bluetooth 4.1 dual radio, optional RFID capability, a smart battery with PowerPrecision+ functionality, Near Field Communication (NFC), a color LCD display and Made for iPhone® (MFi). MFi printers provide Apple co-processor (MFi) support which allows an Apple device such as an iPhone or iPad® to authenticate and connect over Bluetooth®.

Made for iPod iPhone iPad

These printers use CPCL, ZPL and EPL programming languages. To create and print labels using these languages, refer to the Programming Guide for CPCL (p/n P1073699-001), ZPL (p/n P1012728-010) and EPL (p/n 14245L-002). See Appendix H for instructions on how to access manuals on zebra.com.

ZQ630 Software Utilities:

- ZebraNet Bridge Enterprise™: printer configuration, fleet management
- Zebra Setup Utility: single printer configuration, quick setup
- Zebra Mobile Setup Utility: Android-based setup tool
- ZebraDesigner Pro v2: label design
- Zebra Designer Drivers: Windows® driver
- OPOS Driver: Windows driver
- Multiplatform SDK
- Zebra Downloader
- Printer Profile Manager Enterprise (PPME)
  (These utilities can be found on the Zebra website at http://www.zebra.com/us/en/support-downloads.html. See Appendix G.)

Unpacking and Inspection

- Check all exterior surfaces for damage.
- Open the media cover (refer to “Loading the Media” in the Getting Ready to Print section) and inspect the media compartment for damage.

In case shipping is required, save the carton and all packing material.

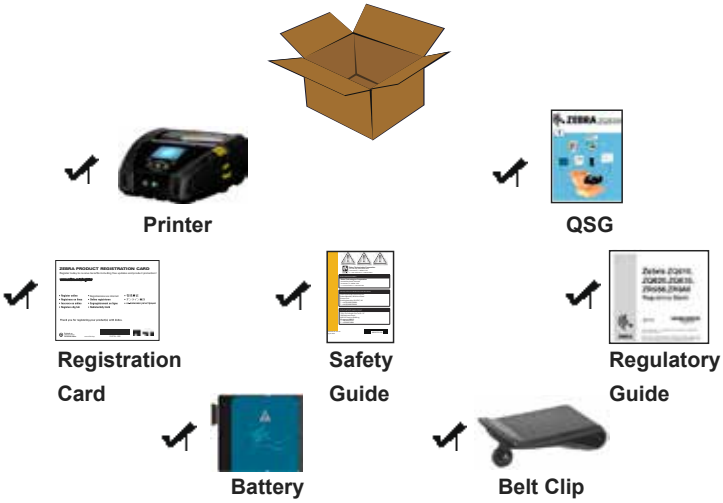

Reporting Damage

If you discover shipping damage:

- Immediately notify and file a damage report with the shipping company. Zebra Technologies Corporation is not responsible for any damage incurred during shipment of the printer and will not cover the repair of this damage under its warranty policy.
- Keep the carton and all packing material for inspection.
- Notify your authorized Zebra re-seller.

ZQ630 Technology

The ZQ630 printer use several technologies made popular in other Zebra Mobile Printer product lines, as well as newer, state-of-the-art technologies.

PowerPrecision+ (PP+) Battery

The ZQ630 printer uses a 4-cell Li-Ion battery pack with integrated intelligence and data storage capability meeting PowerPrecision+ (PP+) functionality. This intelligent battery has the integrated technology required to collect the detailed realtime battery metrics needed to maximize useful battery life and ensure every battery is healthy and able to hold a full charge. In addition, technology inside the batteries tracks and maintains the metrics required to provide real-time visibility into more meaningful battery statistics, such as total cycle usage of the battery, whether the battery is old and should be retired or how long a battery will take to fully charge.

Operating Temperature	Charging Temperature	Storage Temperature
-20˚C to +50˚C (-4˚F to 122˚F)	0˚C to +40˚C (32˚F to 104˚F)	-25˚C to +65˚C (-13˚F to 149˚F)

The ZQ630 printer will only function properly with genuine Zebra smart battery packs.

The smart battery's health has three states: GOOD, REPLACE, and POOR. The battery health factor determines whether or not the printer can operate and what is communicated to the user via the display.

# of Charge Cycles	Health	Power-up Message
<300	GOOD	None
≥300 but <550	REPLACE	"Battery Diminished Consider Replacing" *
≥550 but <600	REPLACE	"Warning-Battery Is Past Useful Life" *
≥600	POOR	"Replace Battery Shutting Down" **

*** Warning accompanied by one long beep.**

**** Warning will flash on and off accompanied by beeping at a rate of once per second. After 30 seconds the printer will shut down.**

Note • Power down the printer before removing the battery to minimize the risk of corruption.

Printing Technology

The ZQ630 printer uses the Direct Thermal method to print human readable text, graphics and barcodes. It incorporates a sophisticated print engine for optimal printing under all operational conditions. Direct thermal printing uses heat to cause a chemical reaction on specially treated media. This reaction creates a dark mark wherever a heated element on the printhead comes in contact with the media. Since the printing elements are arranged very densely at 203 d.p.i. (dots per inch) horizontal and 200 d.p.i. vertical, highly legible characters and graphic elements may be created a row at a time as the media is advanced past the printhead. This technology has the advantage of simplicity, as there is no requirement for consumable supplies such as ink or toner. However, since the media is sensitive to heat, it will gradually lose legibility over long periods of time, especially if exposed to environments with relatively high temperatures or in direct sunlight.

QR Code

The QR barcode includes human readable text URL, for example www.zebra.com/zq630-info, which links the user to printer information and short videos on topics such as buying supplies, features overview, loading media, printing a configuration report, cleaning instructions, and accessory information.

Figure 1 • QR Code

Made for iPhone (MFi)

ZQ630 printer supports communication with Apple devices running iOS 10 or later over a standalone Bluetooth 4.1 radio and the BT4.1 radio included with the 802.11ac (dual) radio.

Made for iPod iPhone iPad

Near Field Communication (NFC)

The ZQ630 printer supports a passive NFC tag which complies with the “Android Standard Tag format” since Android devices are the most common found on the market today. The NFC tag is programmed from the factory and supports Bluetooth pairing to enable a tablet, smartphone or terminal to automatically pair with the printer via a Bluetooth connection (within the bounds of the security profile being used).

The NFC tag also supports app launching whereby an app developed either by Zebra or a third party will launch on a NFC-enabled smartphone, tablet or terminal. Similarly, the NFC tag enables launching to a web support page via a tablet, smartphone or terminal.

Color LCD Display

The ZQ630 printer features a color, non-touch LCD display which supports a 288x240 pixel viewable area. The user will be able to view the display in both room light and night time conditions. The display is capable of displaying colored text as well as color images. In order to save power, the display will dim after a configurable timeout.

Radio-Frequency Identification (RFID)

The ZQ630 printer is equipped with an RFID encoder/reader, which is integrated into the printer’s printhead assembly. The ZQ630 encodes (writes) information on ultra-thin UHF RFID transponders that are embedded in “smart” labels, tickets, and tags. The printer encodes the information; verifies proper encoding; and prints bar codes, graphics, and/or text on the label’s surface. The ZQ630 printer uses Zebra’s extensive set of RFID commands running under ZPL programming language.

The RFID transponder is sometimes called the RFID tag or an inlay. The transponder is usually made of an antenna that is bonded to an integrated circuit (IC) chip. The IC chip contains the RF circuit, coders, decoders, and memory. If you hold an RFID label up to the light, you can see the transponder's antenna, and you can feel a bump in the label where the IC chip is located. The ZQ630 can encode and verify EPC (Electronic Product Code) Generation 2 Class 1 UHF passive RFID tags, in addition to printing human readable text and conventional 1 and 2-D barcode information on Zebra supplied RFID thermal transfer media. EPC is a product numbering standard that can be used to identify a variety of items by using RFID technology. EPC Generation 2 tags offer advantages over other tag types. The tag identification (TID) memory in a Generation 2 tag includes the chip manufacturer and model number information, which can be used to identify which optional features are present on the tag. These optional features include those for data content and security.

Gen 2 tags typically have a 96-bit EPC identifier, which is different from the 64-bit identifiers common in early EPC tags. The 96-bit EPC code links to an online database, providing a secure way of sharing product-specific information along the supply chain. Gen 2 tags also support much larger data structures. The size of user memory available (if any) varies by the model and manufacturer of the tag.

Encoding and printing of an RFID label usually are completed on the first try, but some failures may occur. If you experience consistent encoding failures, it may signal a problem with the RFID tags, your label formats, or with the transponder placement. If an RFID tag cannot be encoded, "VOID" will be printed on the label. The printer then attempts to read/encode "n" labels before the next format is attempted, where "n" is specified by the ZPL programming language "^RS" command. Acceptable values of "n" are 1 to 10 and the default is 3. After printing the defined number of voided RFID labels, the printer default is No Action (Label format causing the error is dropped).

While the user doesn't have control of where on the label the VOID is printed, they can control the length of the image. The start of the VOID image is always at the program position (or F0 if a backward program position). More information on the "^RS" command may be found in the RFID Programming Guide 3 available on zebra.com.

Please refer to Appendix D for details on RFID menu options.

Note • RFID is an optional feature on the ZQ630 and is a factory-installed option only.

RFID Calibration

RFID calibration sets communication parameters for your tag type. This procedure should be done after the printer has been calibrated for the media (length and gap settings), typically a label length calibration. During the RFID calibration process, the printer moves the media, calibrates the RFID tag position, and determines the optimal settings for the RFID media being used.

These settings include the programming position, the read/write power level to use. To restore the printer's default programming position at any time, use the "restore" option in the rfid.tag.calibrate SGD command.

Do not remove any labels or tag from the liner (label backing or 'web'). This allows the printer to determine RFID settings which do not encode adjacent tags.

Always do a Label Length Calibration and RFID Calibration when you change media type. It should not be necessary when simply replacing an empty roll of the same media.

Before beginning, load RFID media into the printer and perform the label length calibration.

1. Press the Feed button once to advance one label.
2. Press the Home button . Navigate to the RFID menu button and press the 'OK' button on the keypad.
3. Use the 'Left' and 'Right' arrows on the keypad to browse to the 'RFID CALIBRATE' procedure. Press the 'OK' button on the keypad.
4. The printer will slowly feed a label while adjusting the location and RFID read/write communication settings for your chosen RFID tag/label. The printer will feed an additional label in some cases when calibration has completed successfully with the display message reading: READY.
5. Remove the excess media. Media calibration has finished and you are ready to print.

ZQ630 Overview

Figure 2 • Overview of Features

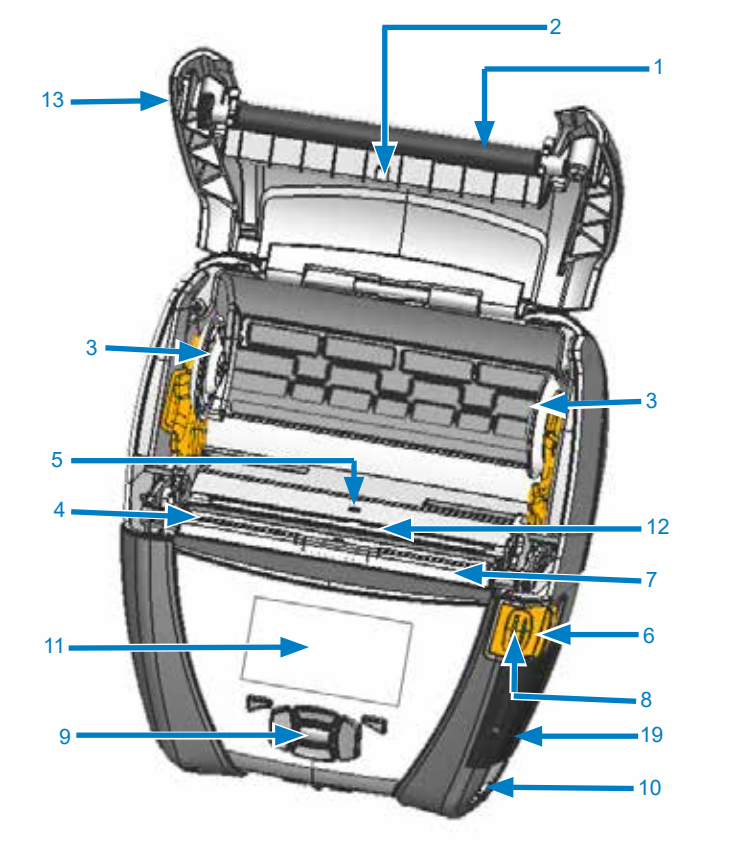

1. Platen Roller
2. Back Side Sensor
3. Media Support Disks
4. Tear Bar
5. Front Side Sensor
6. Peeler Lever
7. Peeler Bail
8. Latch Release Lever
9. Key Pad
10. Strap Post
11. Status Screen
12. Printhead
13. Media Cover
14. Belt Clip
15. Battery
16. DC Input
17. MAC Address Label
18. Docking Contacts
19. USB/RS-232 Comm Ports
20. Print Touch (NFC) Icon

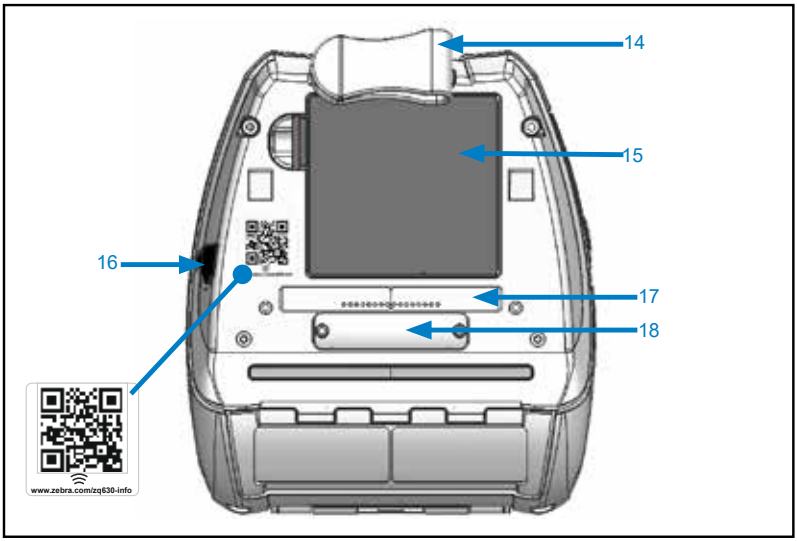

Note • Scanning the QR code with a smartphone will provide printer-specific information at www.zebra.com/zq630-info.

Note • Tapping the Zebra Print Touch™ icon with a Near Field Communication (NFC) enabled smartphone will provide instant access to printer-specific information. For more information about NFC and Zebra products, go to http://www.zebra.com/nfc. Bluetooth pairing applications via NFC is also possible. Please see Zebra Multi-platform SDK for more information.

Battery

Installing/Removing Battery & Battery Tape Insulator

Important • Batteries are shipped in sleep mode to preserve their maximum capacity while in storage prior to initial use. Plug in the AC adapter (see page 22) or insert the battery into the 1-Slot Battery Charger (see page 25) or 3-Slot Battery Charger (see page 29) to wake it up before using for the first time.

Removing the Battery

1. If a belt clip is present on the bottom of the printer, rotate it such that it provides clearance for the battery or remove altogether.

2. Depress the latch on the battery pack (where indicated).

3. Rotate the pack away from the battery well. Lift the battery up and out of the printer.

Removing the Battery Tape Insulator

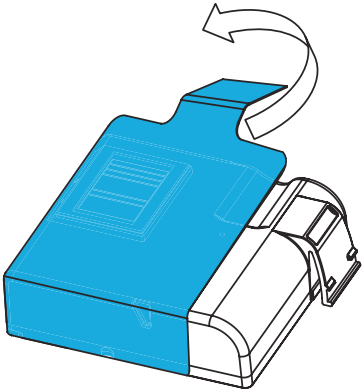

1. Pull up on the tape insulator tab located on the bottom of the battery pack.

2. Peel back the tape insulator and remove it from the top of the battery pack. Discard upon removal.

Caution • Battery can explode, leak or catch fire if improperly charged or exposed to high temperature. Do not disassemble, crush, puncture, short external contacts or dispose in fire or water. Charge on a Zebra approved Lithium-Ion charger only.

Installing the Battery

1. Locate the battery compartment on the bottom of the printer (where indicated).

2. Swivel the belt clip (if present) to access the battery compartment or remove altogether.

3. Insert the battery into the printer as shown. (It is not possible to insert the pack in the incorrect orientation.)

4. Rock the battery into the compartment as shown until it locks in place.

Battery Safety

Caution • Avoid accidental short circuiting of any battery. Allowing battery terminals to contact conductive material will create a short circuit which could cause burns and other injuries or could start a fire.

Important • Always refer to the Important Safety Information data sheet shipped with each printer and the Technical Bulletin shipped with each battery pack. These documents detail procedures to ensure maximum reliability and safety while using this printer.

Important • Always dispose of used batteries properly. Refer to Appendix E for more battery recycling information.

Caution • Use of any charger not approved specifically by Zebra for use with its batteries could cause damage to the battery pack or the printer and will void the warranty.

Caution • Do not incinerate, disassemble, short circuit, or expose to temperatures higher than 65°C (149°F).

Charger Safety

Do not place any charger in locations where liquids or metallic objects may be dropped into the charging bays.

AC Power Adapter
(p/n P1031365-024 with US Type-A Line Cord)

Figure 3 • AC Power Adapter Charging

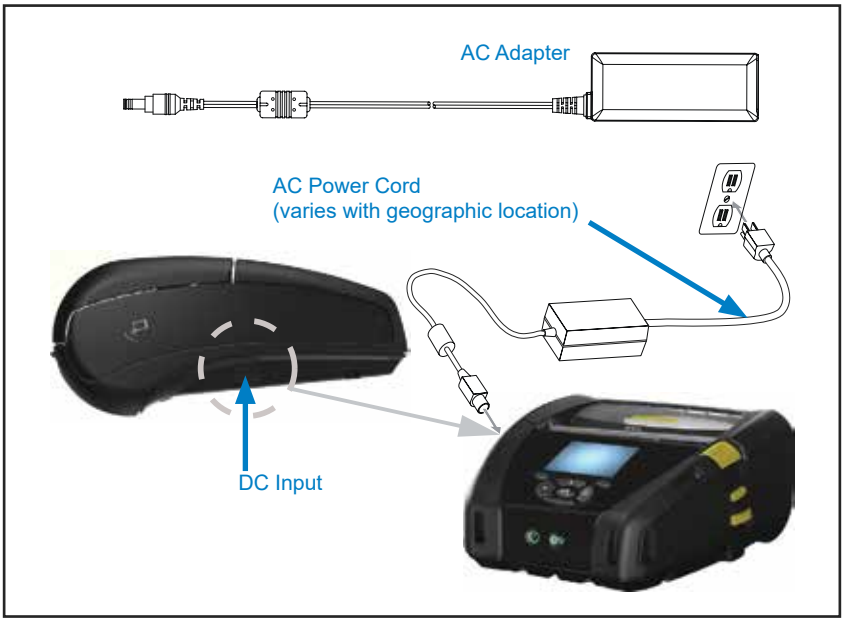

- Open the protective cover on the printer to expose the DC input charger jack.
- Connect the appropriate AC power cord for your location to the adapter and then plug the power cord into an AC receptacle.
- Plug the barrel plug from the AC adapter into the charger jack on the printer.
- The printer will power up and begin charging. The printer can be left on or turned off at this point. Charging will continue in either state.

Important • While it's possible to charge the battery when using the printer, charge times will increase under this condition.

Ethernet and Charging Cradle

The ethernet cradle is an expansion base intended for use with the ZQ630 printer. The cradle provides charging power to the docked printer as well as providing a standard 10/100 Mb/s Ethernet port for communication to the printer. The cradle also supplies battery charging power to the docked printer and acts as a supplementary power source.

The cradle features two LED's to indicate the status of the cradle: Solid green to indicate when power is provided to the input of the cradle; and blinking green to indicate Ethernet activity. The cradle allows the user to dock the printer easily and remove it with the push of a button. The printer will remain operable while docked, i.e. display is viewable, charge LED status is viewable, and printer controls and data entry are available. The printer will still print while docked and the user will be able to replace the media as well.

LED Status Indicator

LED Status	Indication
Solid Green	Power On
Blinking Green	Ethernet Activity

Note • Remove the docking contacts cover on the bottom of the printer before docking the printer in the cradle.

Note • Clean the docking contacts with a Zebra cleaning pen to remove any residue left behind by the label.

Figure 4 • Ethernet Cradle

Height	Width	Length
66.2 mm (2.6 in.)	200.6 mm (7.89 in.)	219.61 mm (8.64 in.)

Printer Operation with Cradle

- ZQ630 printer will charge when placed in the cradle.
- Docking the printer in the cradle will automatically turn the printer on to ensure it is available to be managed remotely.
- When the printer detects input power from the cradle, and the presence of a live Ethernet link, it will automatically connect to the Ethernet network.
- The 802.11ac radio will be turned off when the Ethernet link is active. It will turn back on if the Ethernet link is no longer active.
- For printers with a Bluetooth radio, this interface will remain active while the printer is in the cradle.
- The serial and USB ports will remain active while the printer is in the cradle.
- The DC input barrel jack connector cannot be used while the printer is in the cradle. The DC barrel jack should be plugged directly into the cradle instead.

Note • The printer provides over voltage protection such that no damage occurs when voltages from 0-36V are applied at the DC Power jack. Upon application of voltage greater than 36V, the DC line fuse will permanently open to reduce fire hazard. The battery is only charged when 12VDC is applied using the Zebra AC adapter.

1-Slot Battery Charger
(p/n SAC-MPP-1BCHGUS1-01SA with US Type-A Line Cord)

Use Case: Home Office/Small Business

The 1-Slot Battery Charger provides the user with a single, spare battery charging solution. Similar to the 3-Slot Battery Charger, the single charger will charge a 4-cell battery within six (6) hours.

Figure 5 • 1-Slot Battery Charger

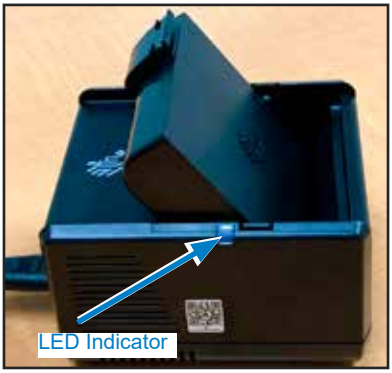

Charging Status Indicators

Both the 3-slot and 1-slot battery chargers use an LED indicator located next to each slot to indicate the charge state in either green, red, or amber as detailed below.

Mode	Charging Indication	Description
Charge Fault	●○●○	Fast blinking red
Charging (Healthy)	●	Solid amber
Charge Done (Healthy)	●	Solid green
Charging (Unhealthy)	●	Solid red
Charging Done (Unhealthy)	●	Solid red
Best Battery (Charging)	● ✸	Alternates between solid and bright bursts of amber
Best Battery (Charge Done)	● ✸	Alternates between solid and bright bursts of green

3-Slot Battery Charger (p/n SAC-MPP-3BCHGUS1-01) Dual 3-Slot Battery Charger (p/n SAC-MPP-6BCHUS1-01) w/ US Type-A Line Cord

Use Case: Settlement Room

The 3-Slot Battery Charger is a charging system for use with the 2-cell lithium-ion batteries used in the ZQ630 printer. The 3-slot charger is capable of charging three 4-cell batteries simultaneously within six (6) hours. It can either be used as a standalone charger or mounted on a 5-slot share cradle.

Figure 6 • 3-Slot Battery Charger

Note • For detailed information on the 1-Slot, 3-Slot Battery Charger and 3-Slot Dual Pack Charger, refer to the P1096323-101, P1096767-101 and P1097966-101 Quick Start Guides at https://www.zebra.com/us/en/support-downloads.html

Loading the Media in the ZQ630 Printer

You can operate ZQ630 printer in one of two different modes: Tear-Off or Peel-Off. Tear-Off mode allows you to tear off each label (or a strip of labels) after it is printed. In Peel-Off mode, the backing material is peeled away from the label as it is printed. When printing batches, after you remove the label, the next one is printed.

Loading Media Procedure

1. Open the printer (Refer to Figure 7).

- Press the Media Cover Button on the side of the printer as shown in “1” below. The Media Cover will open automatically.
- Rotate the Media Cover back completely as shown in “2”, exposing the media compartment and adjustable media supports.

Figure 7 • Opening the Printer

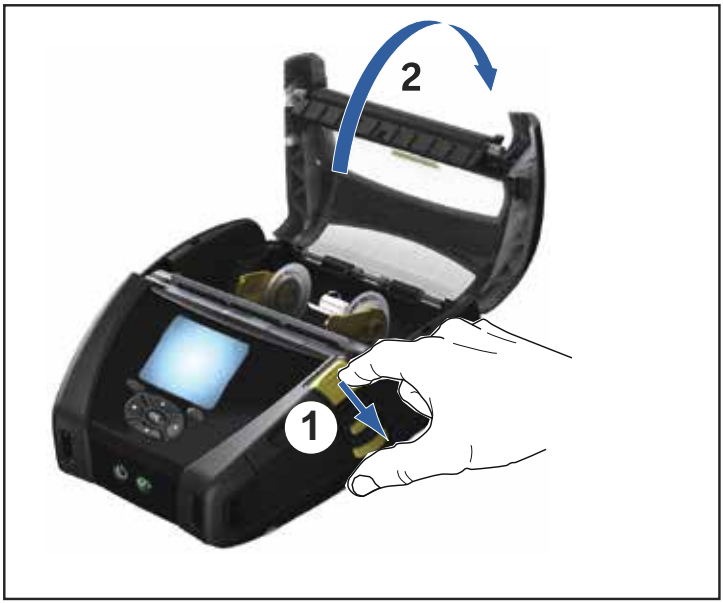

2. Pull the media supports apart. Insert the roll of media (in the orientation shown) between the supports and let the supports secure the media in place. The supports will adjust themselves to the width of the media, and the media roll should be able to spin freely on the supports.

Figure 8 • Loading Media

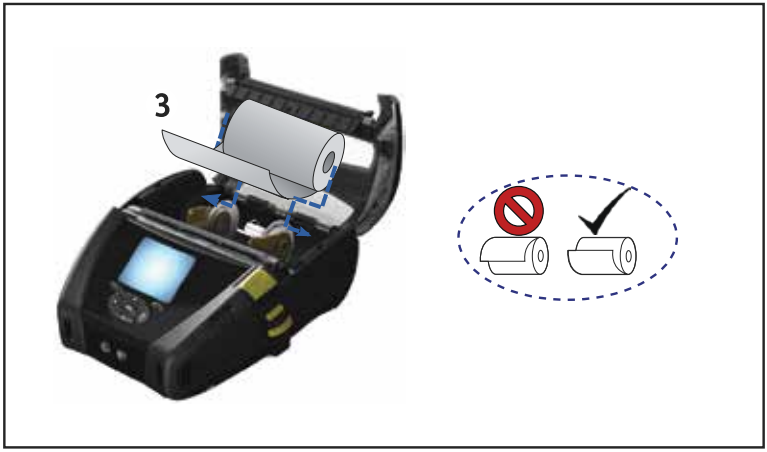

3. If you plan to use the printer in tear-off mode, close the media cover as shown below.

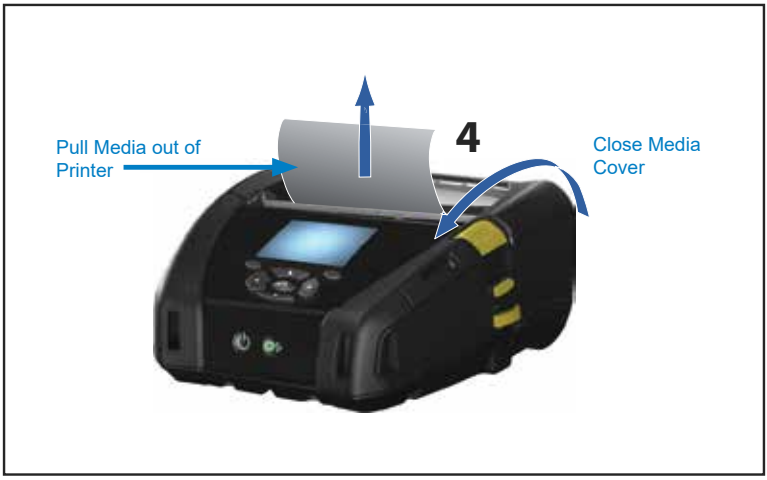

Note • Please refer to the Programming Guide (P1012728-010) for information on changing the setting to adjust the media feed length via a Set-Get-Do (SGD).

Loading Media in Peel-off Mode

- If you plan to use the printer in the peel-off mode, peel a few labels off of the media and load the media as previously described.
- Press down on the latch release lever to open the media cover and load the media as shown in Figures 7 and 8.
- Close the media cover as shown in (1) in Figure 9.
- Push the peeler lever up (2) and lock it in place to release the peeler bail into the “up” position (3).
- The media will feed between the peeler bail and platen.

Figure 9 • Activating Peeler Bar

- Turn on the printer or press the Feed button on the front of the printer if the printer is already on. The printer will advance the media to the next label, if printing labels. If you are printing on journal media, the printer will advance a short strip of media.

To disengage the peeler bail, press the button on the peeler lever and press down on the peeler button to lock it in place in its original home position.

Operator Controls

The ZQ630 printer comes equipped with a keypad control panel and a color LCD graphical user interface. The standard control panel is illustrated in Figure 10. The LCD interface allows easy display and selection of many printer functions as detailed on following pages.

Standard Control Panel

The standard control panel has multiple control buttons and two multipurpose indicators.

- The Power Button (Fig. 10) turns the printer on and off. It also puts the printer in Sleep Mode and wakes it from sleep.
- The Media Feed Button (Fig. 10) advances a length of media which is determined by the type of media being used. Label media will be advanced to the next gap or bar sense marker. Journal (plain) media will be advanced by a length determined by the printer's software.
- Four Way Navigation Buttons (Fig. 12) allow the user to scroll between functions on the LCD user space. (The Navigation Buttons do not apply to the Status Bar and Navigation Bar.)
- Enter Button allows the user to select the desired function highlighted on the LCD interface and is indicated by the word "OK".
- Two software defined function keys (Fig. 12) allow the user to select a function listed on the navigation bar

Figure 10 • Control Panel

Power Button
Press to turn unit on. There will be approximately a 20 second boot up time. Press for 3 sec. to turn unit off.

Feed Button
Press to advance a blank label or a software-determined length of journal media.

Normal Boot-up LED Behavior

1. Press Power (on/off) button to turn the printer on.
2. When Power button is released, the power ring will blink as the printer boots up.
3. When the boot-up sequence is complete, the power ring will stop blinking and remain steadily lit. The color of the power ring depends on the charge status.

Sleep Mode LED Behavior

1. Pressing the Power Button for less than three (3) seconds will put the printer in sleep mode.
2. During Sleep Mode, the Power LED will slowly pulse either Green, Amber or Red depending upon whether or not the printer is charging successfully.

Shutdown Behavior

1. Press the Power Button for approximately three (3) seconds to turn the printer off.
2. The “Shutting Down” alert message will appear on the LCD prior to the printer shutting down.

Figure 11 • Printer Shutdown

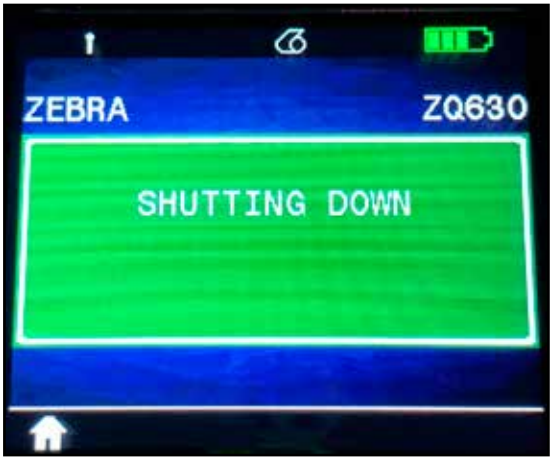

Power LED Ring Behavior

The Power Button is surrounded by a three-color (green, amber, red) LED ring. The Power LED Ring will:

- Blink once per 2 seconds green/amber/red during boot-up.
- Display solid green when the printer is fully charged while On or Off.
- Pulsing green to indicate Sleep Mode and not charging.
- Solid amber to indicate charging while On or Off.
- Pulsing amber to indicate charging while in sleep mode.
- Solid red to indicate an unhealthy charging or charged battery when not in sleep mode (either On or Off).
- A charge fault will flash red twice per second.
- Pulsing red to indicate unhealthy charging or charged battery when in sleep mode.

	Blink green/amber/red during boot-up
	Power On/Charged Battery
	Pulse green Sleep Mode/Not Charging
	Power On/Battery Charging
	Charging in Sleep Mode
	Charging/Charge Complete (Unhealthy)
	Charging/Charge Complete (Unhealthy/Sleep Mode)
	Charge Fault

= blinking

= solid state

= pulsing

LCD Control Panel

The color LCD control panel allows the user to view the status of the ZQ630 printer and have access to various printer alerts and messages. It also has multi-directional keys which allow navigation and selection of menu options affecting printer functions. These keys allow scrolling through the various options and settings. The “OK” button allows selection of the option or function displayed on the screen.

The top of the screen has a row of status icons, or a Status Bar, which indicate the state of various printer functions. The Status Bar is located above the Status Screen shown below along with a Navigation Bar. The Status Screen is the default display and is shown at power up. When navigating the menus, the printer will automatically return to this screen when the user is done navigating after an appropriate delay.

Figure 12 • LCD Control Panel

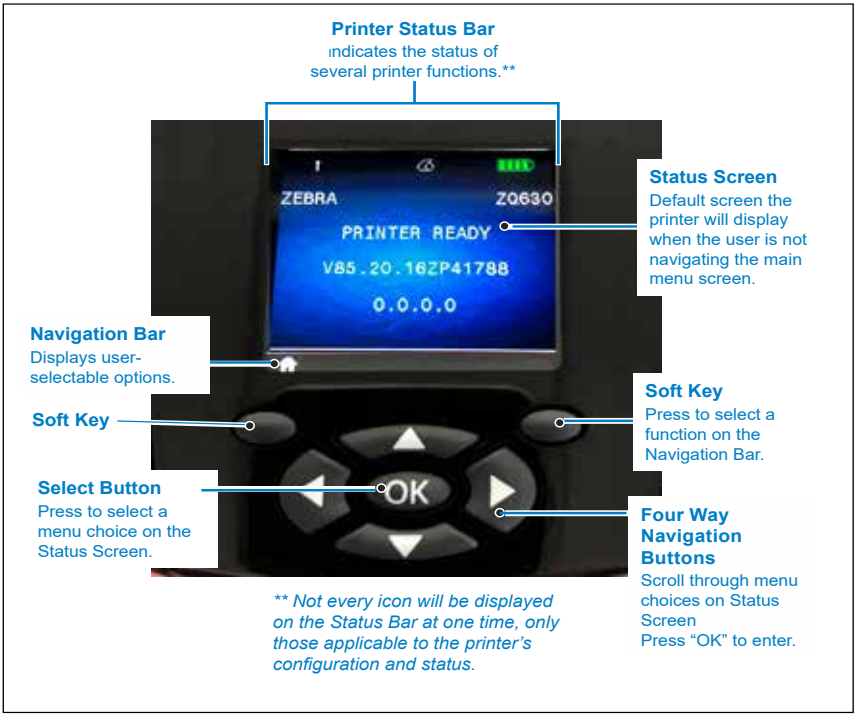

Status Bar Icons

Indicates Bluetooth® connection status. The icon will blink to show that the printer is receiving label data via Bluetooth, and is **solid blue** when link is established. This icon appears only on printers with the Bluetooth wireless option installed.

Indicates that the printer is connected to a radio network via 802.11 protocols. The antenna icon will blink with no parentheses when looking for an access point. One set of solid parentheses with blinking antenna indicates WLAN is associated and attempting authentication. Two sets of solid parentheses and solid antenna indicate the printer is successfully connected to the WLAN.

The icon and two parentheses will blink to show the printer is receiving printer data via WLAN. The four (4) bars indicate the strength of the WLAN connection to the access point. These icons appear only with the 802.11 radio installed, i.e. one **solid yellow** bar, two **solid green** bars, three **solid green** bars and four **solid green** bars.

The Ethernet icon will **blink green** when the printer is receiving label data via the Ethernet connection and **solid green** when connected. It will not be displayed on the status bar when the Ethernet is inactive. This icon appears only when the Ethernet option is installed and the printer is docked in Ethernet cradle.

The Data icon indicates data being sent to the printer, i.e. the icon will **blink green** when there is a label data transmission via the serial or USB ports. It will be **solid green** when the parser is locked.

The Media Out icon will **blink red** when there is no media in the printer and will appear solid white when there is media in the printer.

The Head Latch icon indicates if the media cover is closed or not properly latched. It will appear unlocked and **blinking red** if open and will not appear if the cover is closed.

The Error icon will be displayed and **blink red** if an error condition exists. The icon will not be displayed if no printer error exists. Since there are separate icons for Media Out and Head Latch Open, these two alerts do not apply to the Error icon.

The Battery Charge Level icon indicates the reported state of charge from the battery pack. In a non-charging state, four (4) **solid green** bars indicates the battery level is greater than 80%. Three (3) **solid green** bars indicates if the battery level is less than or equal to 80% but greater than 60%. Two (2) **solid yellow** bars indicates if the level is less than or equal to 60% but greater than 40%. One (1) **solid red** bar indicates if the battery level is less than or equal to 40% but greater than 20%. And zero (0) bars (**solid red** battery outline) indicates if the level is less than or equal to 20%.

While the battery is charging, a lightning bolt will appear in the battery icon to indicate that charging is taking place. When the battery is charging and fully charged, four **blinking green** bars will be displayed. When the battery is charging and the level is greater than 80%, the battery icon will alternate between four bars and three **blinking green** bars. When the battery is charging and the level is less than or equal to 80% but greater than 60%, the icon will alternate between three bars and two **blinking yellow** bars. When the battery is charging and the level is less than or equal to 60% but greater than 40%, the icon will alternate between two bars and one **blinking red** bar. When the battery is charging and the level is less than or equal to 40% the icon will alternate between one bar and zero **blinking red** bars.

Home Menu Screen

The printer's control panel includes a display where the user can view the printer's status or change its operating parameters. After the printer completes the power-up sequence, it moves to the Idle Display screen. This screen includes the printer's current status, information such as firmware version and IP address, and a Home menu shortcut.

Press the left soft key to go to the Home Menu screen which displays graphical parameter options including Settings, Tools, Network, RFID, Language, Sensors, Ports, Communications and Battery (as shown in Figure 13). These options allow the user to view the printer's status or change its operating parameters.

Figure 13 • Home Menu Screen

The user can scroll between icons using the four-way arrow buttons. When an icon is highlighted (i.e. Settings above), its text description will be displayed in the middle of the navigation bar (see Figure 13), and can be selected by pressing the "OK" button. This will take the user to the first screen (i.e Darkness) under that parameter, which gives the user status information specific to that option (see Figure 14). In order to navigate to the next screen, click on the right arrow button.

Figure 14 • Parameter Menu Screen Example

Some parameter settings like the Darkness setting above have a scroll option to view multiple setting choices. This option is identifiable by the presence of up and down scrolling arrows located on either side of the display (see Figure 14). Press the up and down arrows on the keypad to scroll through a menu's options. In some cases, further actions will appear on the right side of the status screen (see arrow in Figure 15). Press the right soft key to initiate said action.

Figure 15 • Scrolling Menu

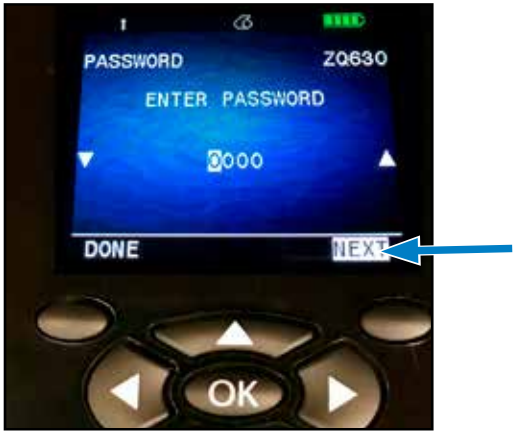

Click on the left soft key to exit the screen and again to return to the Home Menu screen to choose a different parameter.

Home Screen Icons and Parameters

Icon	Parameter
	See Settings menu in Appendix D
	See Tools menu in Appendix D
	See Network menu in Appendix D
	See RFID menu in Appendix D
	See Language menu in Appendix D
	See Sensors menu in Appendix D
	See Ports menu in Appendix D
	See Bluetooth menu in Appendix D

Alert Messages

The ZQ630 printer also displays various blinking alerts, such as “Media Out”, “Media Cover Open”, or “Battery Low”. These alerts are broken up into Errors, Warnings and Info with different color mapping used to differentiate one from the other (see table below).

	INFO	WARNING	ERROR
Foreground Color (Text)	White	Black	White
Background Color	Green	Yellow	Red

Figure 16 • Error Alert Message

The user can respond to actions by pressing one of the soft keys to indicate that an action has been taken to address the alert in question. Once the condition causing the alert has been addressed (i.e. loading media), the alert message will be cleared.

Buttons

The user has the ability to use the ZQ630's multi-button interface to run the following power-up and runtime sequences.

Power-Up Sequences

Seq. #	Function	Keys	Button
1	Two Key Report	Hold down Feed button while pressing power button	
2	Revert to Factory WML	Hold down the UP and DOWN arrows while pressing power button	
3	Forced Download	Hold down both soft keys while pressing power button	
4	Turn printer On or Off or to enter Sleep Mode	Power button	

Note • A user would need to revert to factory WML if some features were turned off in the custom WML and there is a need to get to the "full" menu. Also, if a change was made that caused the WML system to lock up, the user can reboot and restore functionality temporarily in order to fix the mistake.

Note • A forced download is when the printer is powered up in a mode wherein it is running only the code that allows for firmware downloads to happen.

Runtime Sequences without LED Flashes

Seq. #	Function	Keys	Button
1	Media Feed	Feed	
2	Wake, if in Sleep Mode	Any button	

Sleep Mode

The Sleep Mode feature is a way the printer conserves battery life whereby the printer will automatically go into a “sleep” state after twenty (20) minutes of inactivity. When the printer is in this state there will be no content displayed on the LCD in addition to no backlight. The printer will indicate Sleep Mode by a slow blinking green LED ring around the Power Button.

If the Power Button is pressed for less than three (3) seconds, then the printer will go into sleep mode. The printer will indicate this on the LCD in the form of a “Sleeping” Info Alert (see Figure 17), which disappears when the display turns off.

Figure 17 • Sleep Mode Info Message

When the printer is in sleep mode, the green LED ring around the power button will pulse approximately once every three seconds. Pressing any button on the printer will wake the printer from sleep mode. Other power mangement features of the ZQ630 printer include “wake on Bluetooth” and “wake on WiFi” whereby the printer exits sleep mode due to data exchanged via Bluetooth 4.1 or a network message received over WiFi. The printer will not enter sleep mode when docked in an Ethernet cradle.

To enable or disable Sleep Mode, send the `power.sleep.enable` command to the printer using Zebra Setup Utilities (ZSU) and set it to either “on” or “off”. (The default setting is “on”.) To set the time after which the printer will enter Sleep Mode, send the `power.sleep.timeout` (in seconds) to the printer using the ZSU.

Adaptive Print Performance

The ZQ630 printer uses PSPT PrintSmart Gen 2 technology which adapts to your print conditions such that print quality is not sacrificed. When the printer sees environmental conditions such as state of charge, battery health, cold temperature extremes, or high density printing, the printer will adjust print performance to preserve battery function and allow printing to continue. This may affect the speed and sound of printing but not the print quality.

Draft Mode

The user can configure the printer to print in Draft Mode via SGD command `media.draft_mode` (default is “off”), which optimizes the printer for text-only printing. While in Draft Mode, print speed increases from 4 inches per second (ips) to 5 ips with approximately a 22% reduction in optical density.

Note • For an explanation and a list of all SGD commands, please refer to the Programming Guide (p/n P1012728-010) at:
http://www.zebra.com/us/en/support-downloads.html

Verify the Printer is Working

Before you connect the printer to your computer or portable data terminal, make sure that the printer is in proper working order. You can do this by printing a configuration label using the “two key” method. If you can’t get this label to print, refer to “Troubleshooting”.

Printing a Configuration Label

1. Turn the printer off. Load the media compartment with journal media (media with no black bars or gaps on the back)
2. Press and hold the Feed Button.
3. Press and release the Power button and keep the Feed button pressed. When printing starts, release the Feed button. The unit will print a line of interlocking “x” characters to ensure all elements of the print head are working, print out the version of software loaded in the printer and then print the report.

The report indicates model, serial number, baud rate, and more detailed information on the printer’s configuration and parameter settings. (See the Troubleshooting Section for sample printouts and a further discussion on how to use the configuration label as a diagnostic tool.)

Connecting the Printer

The printer must establish communications with a host terminal which sends the data to be printed. Communications occur in four basic ways:

- ZQ630 printer can communicate by cable via either RS-232C or USB 2.0 protocols. Windows drivers that support printing via Serial, USB and the network are included in the Zebra Designer Driver which can be downloaded from www.zebra.com/drivers.
- By means of a wireless LAN (Local Area Network) per 802.11 specifications. (Optional)
- By means of the Ethernet when docked on the Ethernet cradle.
- By means of a Bluetooth short range radio frequency link.
- WinMobile®, Blackberry®, and Android® devices use standard Bluetooth protocol.
- ZQ630 printer is compatible with iOS devices, therefore printing via Bluetooth to an Apple® device is possible.

Made for iPod iPhone iPad

Windows

Cable Communication

Caution • The printer should be turned off before connecting or disconnecting a communications cable.

The ZQ630 printer can communicate by cable; the specific cable supplied with your printer will vary with the host terminal and your model printer.

RS-232C Communications

The 14-pin serial connector on your communications cable plugs into the serial communications port on the side of the printer. ZQ630 printer also have a USB port.

USB Communications

The small 5-pin connector on the USB cable plugs into the printer. The connectors are keyed to assure correct alignment; do not try to force the cable if it does not plug in.

Figure 18 • Communications Options

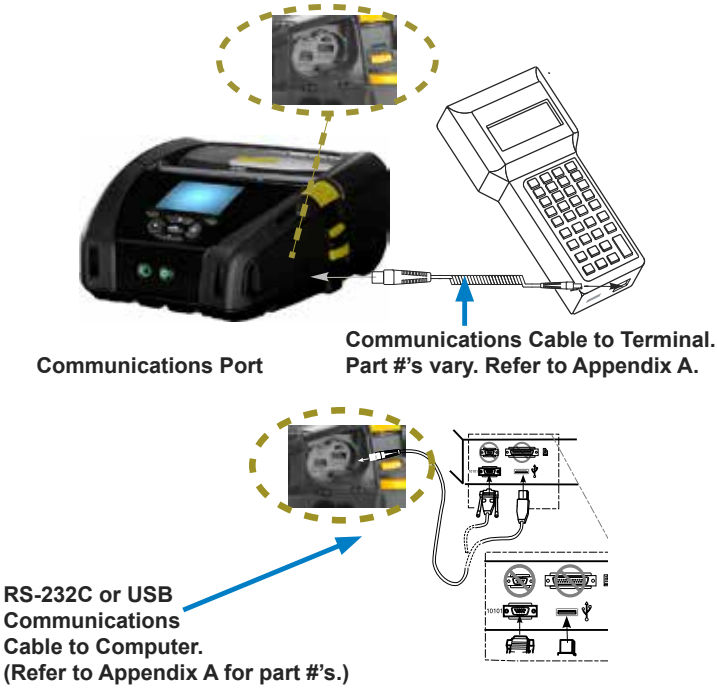

The other end of the cable must be plugged into the host terminal as shown in Figure 18, or to a serial or USB port on a computer. The ZQ630 printer is configured with the USB Open HCI interface driver allowing it to communicate with Windows® based devices.

Zebra Designer Driver uses Windows drivers that support printing via Serial, USB and the network. Other terminals or communications devices may require the installation of special drivers to use the USB connection. Consult the factory for further details.

Providing Strain Relief for Communications Cable

If you are connecting either a USB or RS-232 communications cable to the printer permanently, access the communications port on the side of the printer next to the latch release lever. Plug the connector into the appropriate port and align the plastic locking cap with the cut outs shown below. Rotate the locking cap clockwise to lock the cable in place. (Turn counter clockwise to unlock the cable.) Once locked in place, this provides strain relief for the cable and will prevent the cable from disconnecting from the printer.

1. Insert connector in communications port.

2. Rotate locking cap clockwise to secure.

Note • Only one cable can be present in the USB/RS-232 communications port at a time for strain relief purposes.

Zebra Setup Utilities

Before you start to configure your printer for use on a Local Area Network (LAN), you will need some basic information which will enable you to establish the network configuration for your printer. Zebra Setup Utilities (ZSU) provides a quick and easy way to configure your printers for a variety of purposes, including setting them up for wireless communications either on a Local Area Network (LAN) or using the international Bluetooth™ communications standard.

Once ZSU has been downloaded to your computer, attach the USB cable to the printer and computer as shown in Figure 18.

Go to http://www.zebra.com/setup to download ZSU Installer.

Zebra Android Printer Setup Utility (for Link-OS Printers)

The ZQ630 printer can also be configured using the Zebra Android Printer Setup Utility. This utility can be downloaded from Google Play to an Android device such as a smartphone or the TC51 or TC56 mobile handheld computers. The Android mobile device can be paired with the printer via Bluetooth or a USB cablle and users can quickly navigate the app to perform the following tasks.

Shows currently connected printer

Displays current printer status:

= all clear

= error present

Quick access to Wizards, Printer Actions and Files

Figure 19 • Setup Utility Main Screen

Wireless Communications with Bluetooth

Bluetooth is a worldwide standard for the exchange of data between two devices via radio frequencies. This form of point-to-point communication does not require access points or other infrastructure. Bluetooth radios are relatively low powered to help prevent interference with other devices running at similar radio frequencies. This limits the range of a Bluetooth device to about 10 meters (32 feet). The default for the ZQ630 is Class 2, but the range can be set to Class 1 via a SGD (`bluetooth.power_class`) to increase power. Both the printer and the device it communicates with must follow the Bluetooth standard.

Bluetooth Networking Overview

Each Bluetooth enabled ZQ630 printer is identified by a unique Bluetooth Device Address (BDADDR). This address resembles a MAC address whereby the first three bytes are vendor, and the last three bytes are device (e.g. 00:22:58:3C:B8:CB). This address is labeled on the back of the printer via a barcode for ease of pairing. (For the dual radio, the MAC address label only represents WiFi MAC address. See page 49.) In order to exchange data, two Bluetooth enabled devices must establish a connection. Bluetooth software is always running in the background, ready to respond to connection requests. One device (known as the client) must request/initiate a connection with another. The second device (the server) then accepts or rejects the connection. A Bluetooth enabled ZQ6 printer will normally act as a slave creating a miniature network with the terminal sometimes referred to as a “piconet”. Discovery identifies Bluetooth devices that are available for pairing whereby the master device broadcasts a discovery request and devices respond. If a device is not discoverable, the master cannot pair unless in knows the BDADDR or has previously paired with the device. If both devices support Bluetooth 2.1 or higher they will use Security Level 4 Secure Simple Pairing (SSP), a mandatory security architecture that features two (2) association models: Numeric Comparison and Just Works (no user confirmation).

Bluetooth Security Modes

Security Mode 1	Security Mode 2	Security Mode 3
If a BT>/= 2.1 device is pairing with a BT</= 2.0 device, it falls back to BT 2.0 compatibility mode and behaves the same as BT 2.0. If both devices are BT >/= 2.1, Secure Simple Pairing must be used according to the BT spec.	If a BT >/= 2.1 device is pairing with a BT </= 2.0 device, it falls back to BT 2.0 compatibility mode and behaves the same as BT 2.0. If both devices are BT >/= 2.1, Secure Simple Pairing must be used according to the BT spec.	If a BT >/= 2.1 device is pairing with a BT </= 2.0 device, it falls back to BT 2.0 compatibility mode and behaves the same as BT 2.0. If both devices are BT >/= 2.1, Secure Simple Pairing must be used according to the BT spec.

Security Mode 4: Simple Secure Pairing

Simple Secure Pairing: a new security architecture introduced supported in BT >= 2.1. Service-level enforced, similar to mode 2. Mandatory when both devices are BT >= 2.1. There are four association models currently supported by mode 4. Security requirements for services must be classified as one of the following: authenticated link key required, unauthenticated link key required, or no security required. SSP improves security through the addition of ECDH public key cryptography for protection against passive eavesdropping and man-in-the-middle (MITM) attacks during pairing.

Numeric Comparison	Just Works
Designed for situation where both devices are capable of displaying a six-digit number and allowing user to enter “yes” or “no” response. During pairing, user enters “yes” if number displayed on both devices matches to complete pairing. Differs from the use of PINs in legacy (BT<=2.0) pairing because the number displayed for comparison is not used for subsequent link key generation, so even if it is viewed or captured by an attacker, it could not be used to determine the resulting link or encryption key.	Designed for situation where one (or both) of the pairing devices has neither a display nor keyboard for entering digits (e.g. Bluetooth headset). It performs authentication step 1 in the same manner as as numeric comparison, but the user cannot verify that both values match, so MITM (man-in-the-middle) protection is not provided. This is the only model in SSP that does not provide authenticated link keys.

Each mode, except for Just Works, has Man-In-The-Middle (MITM) protection, meaning no third device can view the data being passed between the two devices involved. The SSP mode is usually negotiated automatically based on the capabilities of both the master and slave. Lower security modes can be disabled via the `bluetooth.minimum_security_mode` SGD. The `bluetooth.minimum_security_mode` SGD sets the lowest security level at which the printer will establish a Bluetooth connection. The printer will always connect at a higher security level if requested by the master device. To change the security mode and security settings in the ZQ630 printer, use Zebra Setup Utilities.

Bluetooth Minimum Security Modes

	BT Version of Master Device (>2.1)
`bluetooth.minimum_security_mode=1`	**Secure Simple Pairing** **Just Works/Numeric Comparison**
`bluetooth.minimum_security_mode=2`	**Secure Simple Pairing** **Just Works/Numeric Comparison**
`bluetooth.minimum_security_mode=3`	**Secure Simple Pairing** **Numeric Comparison**
`bluetooth.minimum_security_mode=4`	**Secure Simple Pairing** **Numeric Comparison**
`bluetooth.bluetooth_PIN`	**Not Used**

`bluetooth.minimum_security_mode` ***sets the lowest security level at which the printer will establish a Bluetooth connection. The printer will always connect at a higher security level if requested by the master device.***

The ZQ630 printer also features bonding for Bluetooth. The printer caches pairing info so devices stay paired through power cycles and disconnects. This eliminates the need to repair on every connection establishment.

The `bluetooth.bonding` SGD is on by default.

Note • For detailed information on Bluetooth, please refer to the Bluetooth Wireless User Guide (P1068791-002) at:
http://www.zebra.com/us/en/support-downloads.html

In addition, the ZQ630 printer supports passive Near Field Communication (NFC) technology. Using the “Print Touch” feature located on the side of the printer, end-users can automatically pair with a handheld device that supports NFC technology. The NFC tag has the printer’s BDADDR encoded in a URL on the tag. Simply touching the NFC handheld device to the “Print Touch” icon on the printer will connect and pair the handheld device to the printer.

WLAN Overview

ZQ630 printers are optionally equipped with a Dual Radio that uses the industry standard 802.11 protocols and Bluetooth 4.1. They will have the FCC ID number on the serial number label on the back of the unit.

- ZQ630 Wireless Network Printers with the Zebra 802.11 WLAN radio module can be identified by the text “Wireless Network Printer” on the serial number label on the back of the printer.
- These printers allow communication as a node within a wireless local area network (WLAN). Methods of establishing communications to the printer will vary with each application.

More information and LAN configuration utilities are included in the ZebraNet Bridge Enterprise™ program (version 2.8 and later).

Zebra Setup Utilities (ZSU) and Zebra Mobile Setup Utility can also be used to configure WLAN communications settings. Both ZebraNet Bridge Enterprise and ZSU may be downloaded from the Zebra Web site.

Figure 20 • BT/WLAN Communications

Setting Up the Software

ZQ630 printer use Zebra's CPCL, ZPL or EPL Programming languages which were designed for mobile printing applications. CPCL and ZPL are fully described in the ZPL Programming Guide (p/n P1012728-010), CPCL Programming Guide (p/n P1073699-001) and ZPL II Programming Guide (p/n 46530L) available on-line at https://www.zebra.com/us/en/support-downloads.html. You can also use ZebraDesigner Pro v2, Zebra's Windows® based label creation program which uses a graphical interface to create and edit labels in either language. Refer to Appendix H for tips on downloading the Designer Pro application from Zebra's Web site.

Designing Labels

The following examples provide guidelines for designing labels for the ZQ630 printer, specifically for Gap Media, Black Bar Media and Journal Media. The illustrations for each media type define recommended tolerances, keep-out zones and safe printing zones designed to avoid any vertical registration issues during printing. Dimensions are determined based on product registration capabilities and Zebra-recommended media tolerances.

Figure 21 • Gap Media

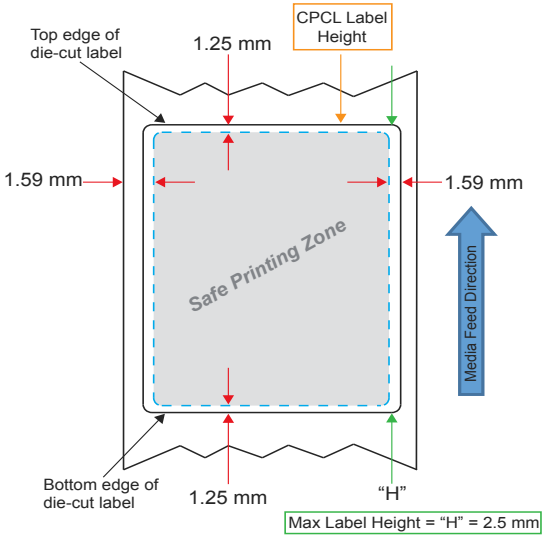

Figure 22 • Journal Media

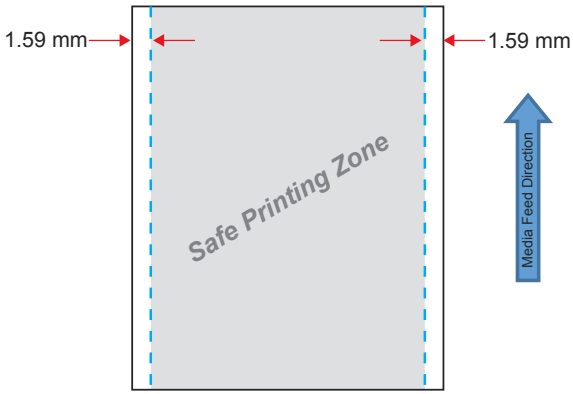

Figure 23 • Black Bar Label Media

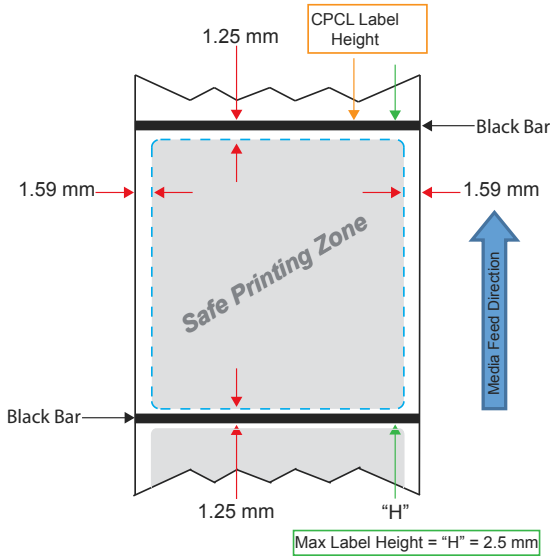

Using Pre-Printed Receipt Media

ZQ630 printers support alignment of pre-printed receipts by using the out of paper sensor located near the printhead.

Black Mark Dimensions (Receipt Media)

The reflective media black marks (or black bar/marks) should extend past the centerline of the roll on the front side of the paper.

- Minimum mark width: 0.59 in. (15 mm) perpendicular to the edge of the media, and centered within the width of the roll.
- Mark length: 0.19 - 0.24 in. (4.8 - 6.0 mm) parallel to the edge of the media.

Label Areas

The media/black bar sensor detects the dark, pre-printed bar on the media, so a path in the center of the paper must be kept free of dark, pre-printed graphics.

Note • Dark, pre-printed graphics refer to any symbols, barcodes, text and/or colored areas that have been applied to the receipt paper rolls before they have ever been used in the printer.

Figure 24 • Label Areas

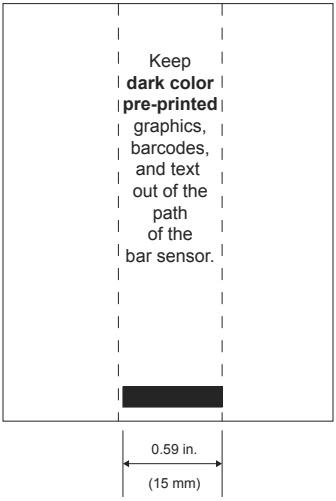

Label Design Examples

This section shows examples of labels with and without problems.

Figure 25 • Label Design Examples

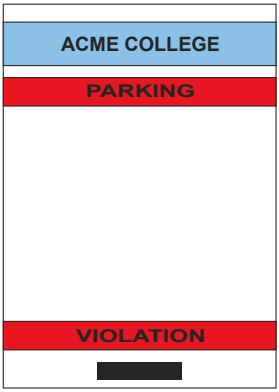

PROBLEM LABEL DESIGN

The dark color, pre-printed text and graphics are in the path of the black bar at the bottom of the receipt.

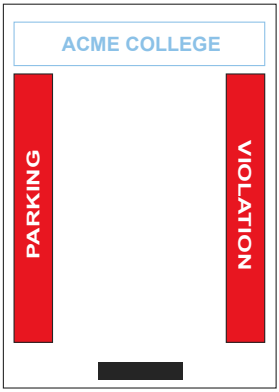

GOOD LABEL DESIGN

The center path to the black bar is free of dark color, pre-printed text and graphics.

PROBLEM LABEL DESIGN

The dark color, pre-printed text and graphics are in the path of the black bar at the bottom of the receipt.

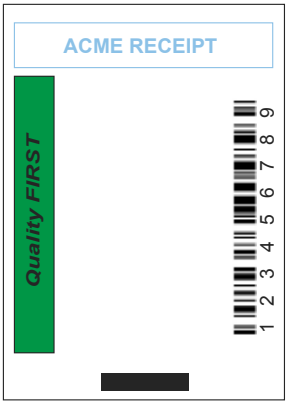

GOOD LABEL DESIGN

The center path to the black bar is free of dark color, pre-printed text and graphics.

Note • Complete information on using pre-printed receipt paper can be found in the FORM command in the CPCL Programming Guide (P1073699-001) at www.zebra.com/manuals.

Keep-Out Areas

At times, incomplete printing of text and/or graphics appear because minimum margins are not provided during label design. The recommended minimum margins, or “keep out areas” are shown in Figure 26.

Figure 26 • Keep Out Areas

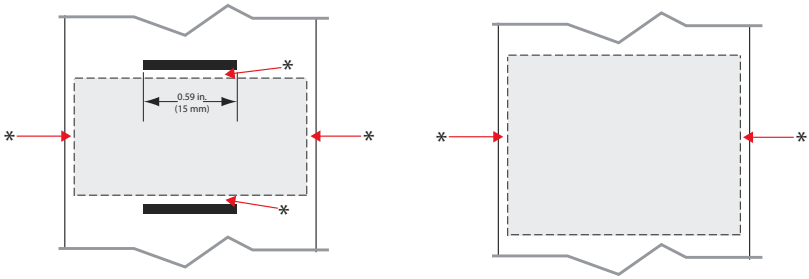

Receipt Paper with Black Bars

***Maintain a minimum “keep out area” of 1/16 in. (1.59 mm) from the two outer edges of the paper roll and from the black bars.**

Continuous Receipt Paper (without Black Bars)

***Maintain a minimum “keep out area” of 1/16 in. (1.59 mm) from the two outer edges of the paper roll.**

Note • The length of each “continuous” receipt is determined by the data sent to the printer.

Near Field Communication (NFC)

Devices using NFC may be *active* or *passive*. A passive device, such as a ZQ630 printer with an NFC tag, contains information that other devices can read but does not read any information itself. An active device, such as a smartphone, can read the information on the printer’s NFC tag, but the tag itself does nothing except transmit the info to authorized devices.

Figure 27 • Near Field Communication (NFC) Pairing

http://www.zebra.com/nfc

NFC Use Cases

- *Bluetooth Pairing* – used to cause a tablet, smart phone or terminal to automatically pair with the printer via a Bluetooth connection, within the bounds of the security profile being used. This shall contain the BT address and serial number of the printer.
- *App launching* – used to cause an app, developed either by Zebra or a third party to be executed on a smart phone, tablet or terminal
- *Web site launching* – used to cause a smart phone, tablet or terminal to display a web site developed by Zebra or a third party developer

Note • Tapping the Zebra Print Touch™ icon with a Near Field Communication (NFC) enabled smartphone will provide instant access to printer-specific information. For more information about NFC and Zebra products, go to http://www.zebra.com/nfc. Bluetooth pairing applications via NFC is also possible. Please see Zebra Multi-platform SDK for more information.

Wearing the Printer

Swivel Belt Clip

The ZQ630 printer has a plastic swivel belt clip (P1031365-028) included as a standard feature. To use: hook the clip over your belt, and ensure that the clip is securely attached to the belt. The belt clip will pivot to allow you to move freely while wearing the printer. In order to install or remove the plastic Belt Clip you will need to remove the battery pack. The printer also has the option of using a more rigid metal belt clip (P1050667-031) which screws onto the printer using two (2) 6-32 x 1/4 Pan Head Phillips screws. The metal clip also attaches to the printer while housed in the Hard Case (P1050667-034) using two (2) 6-32 x 5/8 Pan Head Phillips screws.

Figure 28 • Printer with Belt Clips

Adjustable Shoulder Strap

Refer to Figure 29 if your printer is equipped with the shoulder strap option (p/n P1031365-192).

Figure 29 • Using the Optional Shoulder Strap

1. Insert the end of the shoulder strap behind the post on the front side of the printer and loop it around the post.

2. Insert the hole on the end of the strap over the metal post (circled) to secure.

3. Repeat the same steps on the opposite side of the printer.

Soft Case

The ZQ630 printer has a soft case option (p/n P1050667-017) that also allows you to carry the printer from your belt.

Figure 30 • Using the Soft Case

1. Lift up the top flap of the soft case which is secured with Velcro.

2. Slide the printer into the case such that the LCD display is visible through the plastic window.

Note • The shoulder strap option can be used with the soft case by securing the ends of the shoulder strap on the two metal rings on the soft case.

Hand Strap

The ZQ630 hand strap accessory (p/n P1031365-027) attaches to the printer's cut-outs to provide the user with a convenient and secure method of carrying the printer.

Figure 31 • Using the Hand Strap

1. Insert the loop on the end of the strap through the cut out on the front of the printer as shown below.

2. Loop the end of the strap back around the cut out and secure it over the button.

3. Repeat this process for the opposite end of the strap.

Hard Case

ZQ630 printer has a two piece hard case option (P1050667-034) that also allows you to carry the printer from your belt with the metal belt clip (included), while also providing increased protection for the printer. It pivots via a hinge located on the back and snaps into place in front as shown below. The metal belt clip is mounted to the hard case and printer with two screws. If no belt clip is used, two shorter screws are used to hold the printer to the hard case.

Figure 39 • Using the Hard Case

1. Insert the printer into the bottom half of the Hard Case shell.

2. Rotate the top half of the Hard Case shell over the top of the printer and snap shut.

3. Use a #1 Phillips Head driver to secure the two (2) 6-32 x 5/8 screws to the bottom of the Hard Case.

Waist Holster

ZQ630 printer has a waist holster option (p/n SG-MPP-Q4HLSTR1-01) that allows the user to carry the printer around their waist for easy access.

1. Undo the snap on the Waist Strap which helps attach it to the printer Mount Pad.

2. Unlock the male D swivel clip (circled) on the Waist Strap from the female D clip on the printer Mount Pad to remove.

3. Align the holes on the Mount Pad with the mounting holes on the bottom of the printer (circled). Use a 4mm hex driver on the two 6-32 x 0.375” screws (green circle) and two #6 washers to attach the Mount Pad to the top of the printer. Attach the two (2) 6-32 x 0.625” screws (red circle) and washers on the bottom of the Mount Pad.

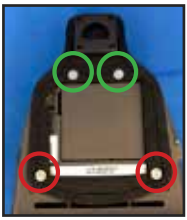

4. Connect the male D swivel clip on the Waist Strap to the female D clip on the printer Mount Pad. Snap shut to secure (opposite side) and rotate the Waist Strap 180°.

5. Unsnap the Waist Strap and adust the strap to the desired length.

6. Wrap the Waist Strap around your waist and snap the clip in place to secure. The printer should hang comfortably below the hip.

Preventive Maintenance

Extending Battery Life

- Never expose the battery to direct sunlight or temperatures over 40° C (104° F) when charging.
- Always use a Zebra charger designed specifically for Lithium-Ion batteries. Use of any other kind of charger may damage the battery.
- Use the correct media for your printing requirements. An authorized Zebra re-seller can help you determine the optimum media for your application.
- If you print the same text or graphic on every label, consider using a pre-printed label.
- Choose the correct print darkness, and print speed for your media.
- Use software handshaking (XON/XOFF) whenever possible.
- Remove the battery if the printer won't be used for a day or more and you're not performing a maintenance charge.
- Consider purchasing an extra battery.
- Remember that any rechargeable battery will lose its ability to maintain a charge over time. It can only be recharged a finite number of times before it must be replaced. Always dispose of batteries properly. Refer to Appendix F for more information on battery disposal.

General Cleaning Instructions

Caution • Avoid possible personal injury or damage to the printer. Never insert any pointed or sharp objects into the printer. Always turn off the printer before performing any cleaning procedures. Use care when working near the tear bars as the edges are very sharp.

Warning • The printhead can get very hot after prolonged printing. Allow it to cool off before attempting any cleaning procedures.

Only use a Zebra cleaning pen (not supplied with the printer) or a cotton swab with 90% medical grade alcohol for cleaning the printhead.

Caution • Use only cleaning agents specified in the following tables. Zebra Technologies Corporation will not be responsible for damage caused by any other cleaning materials used on this printer.

ZQ630 Cleaning

Area	Method	Interval
Printhead	Use a Zebra cleaning pen to swab the thin gray line on the printhead, cleaning the print elements from the center to the outside edges of the printhead.	After every five rolls of media (or more often, if needed). When using linerless type media, cleaning is required after every roll of media.
Platen Surface (Linered)	Rotate the platen roller and clean it thoroughly with a fiber-free swab, or lint free, clean, damp cloth lightly moistened with medical grade alcohol (90% pure or better) (Figure 32).	After every five rolls of media (or more often, if needed)
Platen Surface (Linerless)	Rotate platen roller and clean with a fiber-free swab and 1 part liquid soap (Palmolive or Dawn) and 25 parts water. Use pure water to clean after soap/water mixture. (Figure 33)	Clean platen only if there is an issue during printing, i.e. media not releasing from the platen. (*See Note below.)
Scraper (Linerless Units Only)	Use adhesive side of media to clean scraper on linerless units. (Figure 33)	After every five rolls of media (or more often, if needed).
Tear Bar	Clean thoroughly with 90% medical grade alcohol and a cotton swab. (Figure 32)	As needed
Printer Exterior	Water-dampened cloth or 90% medical grade alcohol wipe.	As needed
Printer Interior	Gently brush out printer. Ensure the Bar Sensor and Gap Sensor windows are free of dust. (Figure 32)	As needed
Interior of units with Linerless Platens	Clean thoroughly with 90% medical grade alcohol and a fiber-free swab. (See Figure 33 for specific target areas for interior cleaning.)	After every five rolls of media (or more often, if needed).

Note • This is an emergency procedure only to remove foreign contaminates (oils, dirt) from the platen that can damage the printhead or other printer components. This procedure will shorten or even exhaust the linerless platen's useable life. If the linerless media continues to jam after cleaning and feeding 1 to 2 meters (3 to 5 feet) of media, replace the platen.

Figure 32 • ZQ630 Cleaning (Linered)

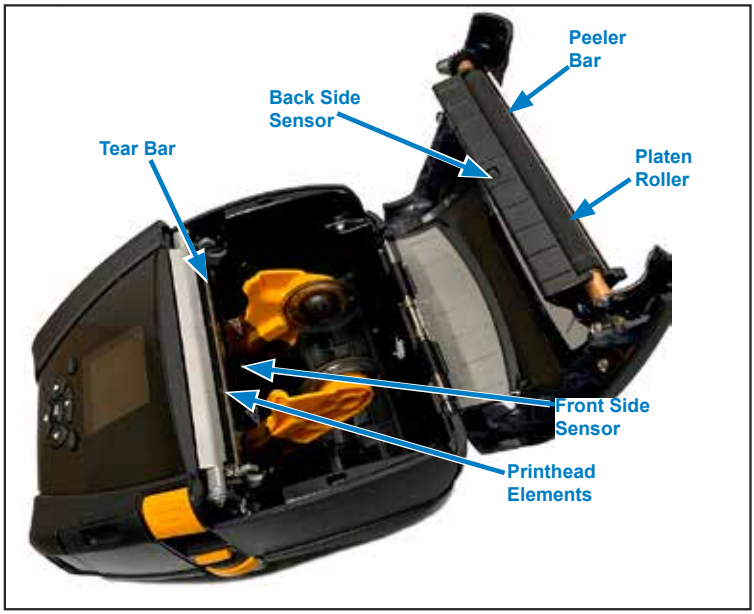

Figure 33 • ZQ630 Cleaning (Linerless)

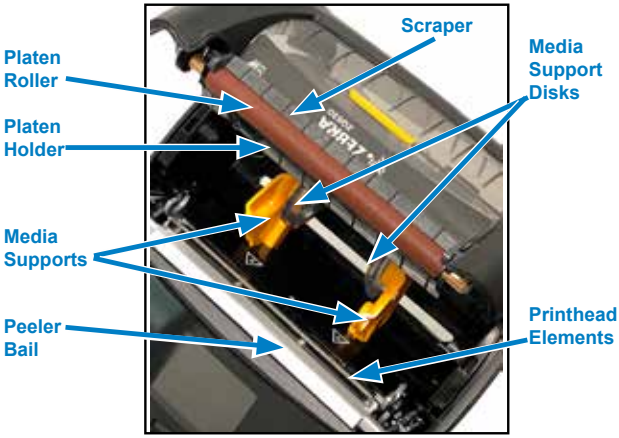

LCD Control Panel Indicators

The top of the display shows several icons which indicate the status of various printer functions. Check the indicator status, then refer to the Troubleshooting topic referenced in the chart to resolve the problem.

Icon	Status	Indication
	Solid blue	Bluetooth link established
	Not Present	Bluetooth link inactive
	Blinking blue	Connecting or transmitting labels
	Antenna Blinking	Looking for AP
	Antenna Blinking/1 Parenthesis Steady	WLAN Associated & Attempting Authentication
	Antenna and 2 Parentheses Steady	WLAN Associated and Authenticated
	Antenna and 2 Parentheses Blinking	Receiving Data
	Not Present	No Radio Present
	4 Green Bars	>80% charged
	3 Green Bars	60%-80% charged
	2 Yellow Bars	40%-60% charged
	1 Red Bar	20%-40% charged
	0 Bars (Red battery outline)	Low Battery
	4 green Blinking w/ Lightning Bolt	Charging >80% Capacity
	3 green Blinking w/ Lightning Bolt	Charging 60-80% Capacity
	2 yellow Blinking w/ Lightning Bolt	Charging 40-60% Capacity
	1 red Blinking w/ Lightning Bolt	Charging 20-40% Capacity
	0 Bars w/ red Lightning Bolt	Charging <20% Capacity
	Blinking red	Media cover open
	Blinking green	Receiving data
	Solid green	Ethernet Connected
	Not Present	No Ethernet Connection
	Blinking green	Data processing in progress
	Solid green	No data being processed
	Blinking red	Out of Media
	Solid white	Media present

Icon	Status	Indication
	Blinking red	Error exists (excluding Media Out and Head Latch Open)
	Not Present	No error exists
	4 green bars	802.11 signal strength > 75%
	3 green bars	802.11 signal strength <= 75%
	2 green bars	802.11 signal strength <= 50% but >25%
	1 yellow bar	802.11 signal strength <= 25%
	0 Bars	No Signal Strength

Troubleshooting Topics

1. No power:

- Check that battery is installed properly.
- Recharge or replace battery as necessary.

Caution • Always dispose of batteries properly. Refer to Appendix F for more information on proper battery disposal.

2. Media does not feed:

- Be sure media cover is closed and latched.
- Check spindle holding media for any binding.
- Ensure most recently printed label is removed (only in peel mode).
- Ensure label sensor is not blocked.

3. Poor or faded print:

- Clean print head.
- Check quality of media.

4. Partial or missing print:

- Check media alignment.
- Clean print head.
- Ensure media cover is properly closed and latched.

5. Garbled print:

- Check baud rate.

6. No print:

- Check baud rate.
- Replace battery.
- Check cable to terminal.
- Establish RF Link and/or restore LAN associativity.
- Invalid label format or command structure. Place printer in Communications Diagnostic (Hex Dump) Mode to diagnose problem.

7. Reduced battery charge life:

- If battery is older than 1 year old, short charge life may be due to normal aging.
- Check battery health.
- Replace battery.

8. flashing:

- Blinking green Data icon is normal while data is being received.

9. or flashing:

- Check that media is loaded and that the media cover is closed and securely latched.

10. Communication error:

- Check baud rate.
- Replace cable to terminal.

11. Label jam:

- Open head release latch and media cover.
- Remove and reinstall media.

12. Skip Labels:

- Check media for top of form sense mark or label gap.
- Check that the maximum print field has not been exceeded on label.
- Ensure bar or gap sensor is not blocked or malfunctioning.

13. Blank LCD screen:

- Make sure printer is turned on.
- No application loaded or application corrupted: reload program.

14. No NFC Connectivity

- Ensure smartphone is positioned 3 inches (7.62 cm) or closer to the Print Touch icon on the side of the printer.

Troubleshooting Tests

Printing a Configuration Label

To print out a listing of the printer's current configuration follow these steps:

1. Turn the printer off. Load the media compartment with journal media (media with no black bars printed on the back).
2. Press and hold the Feed Button.
3. Press and release the Power button and keep the Feed button pressed. When printing starts, release the Feed button.

Note • The configuration report can also be printed from the Info (Help) menu on the LCD.

Refer to Figures 34, 34a, 34b for sample configuration printouts.

Communications Diagnostics

If there is a problem transferring data between the computer and the printer, try putting the printer in the Communications Diagnostics Mode (also referred to as the "DUMP" mode). The printer will print the ASCII characters and their text representation (or the period '.', if not a printable character) for any data received from the host computer.

To enter Communications Diagnostics Mode:

1. Print a configuration label as described above.
2. At the end of the diagnostics report, the printer will print: "Press FEED key to enter DUMP mode".
3. Press the FEED key. The printer will print: "Entering DUMP mode".

Note • If the FEED key is not pressed within 3 seconds, the printer will print "DUMP mode not entered" and will resume normal operation.

4. At this point, the printer is in DUMP mode and will print the ASCII hex codes of any data sent to it, and their text representation (or "." if not a printable character).

Additionally, a file with a ".dmp" extension containing the ASCII information will be created and stored in the printer's memory. It can be viewed, "cloned" or deleted using the Net Bridge application. (Refer to the ZebraNet Bridge Enterprise documentation for more information.)

To terminate the Communications Diagnostics Mode and re- turn the printer to normal operations:

1. Turn the printer OFF.
2. Wait 5 seconds.
3. Turn the printer ON.

Contacting Technical Support

If the printer fails to print the configuration label, or you encounter problems not covered in the Troubleshooting Guide, contact Zebra Technical Support. Technical Support addresses and phone numbers for your area can be found in Appendix H of this manual.

You will need to supply the following information:

- Model number and type (e.g. ZQ630)
- Unit serial number (Found on the large label on the back of the printer, also found in the configuration label printout.)
- Product Configuration Code (PCC) (15 digit number found on the label on the back of the unit)

Figure 34 • ZQ630 Configuration Label

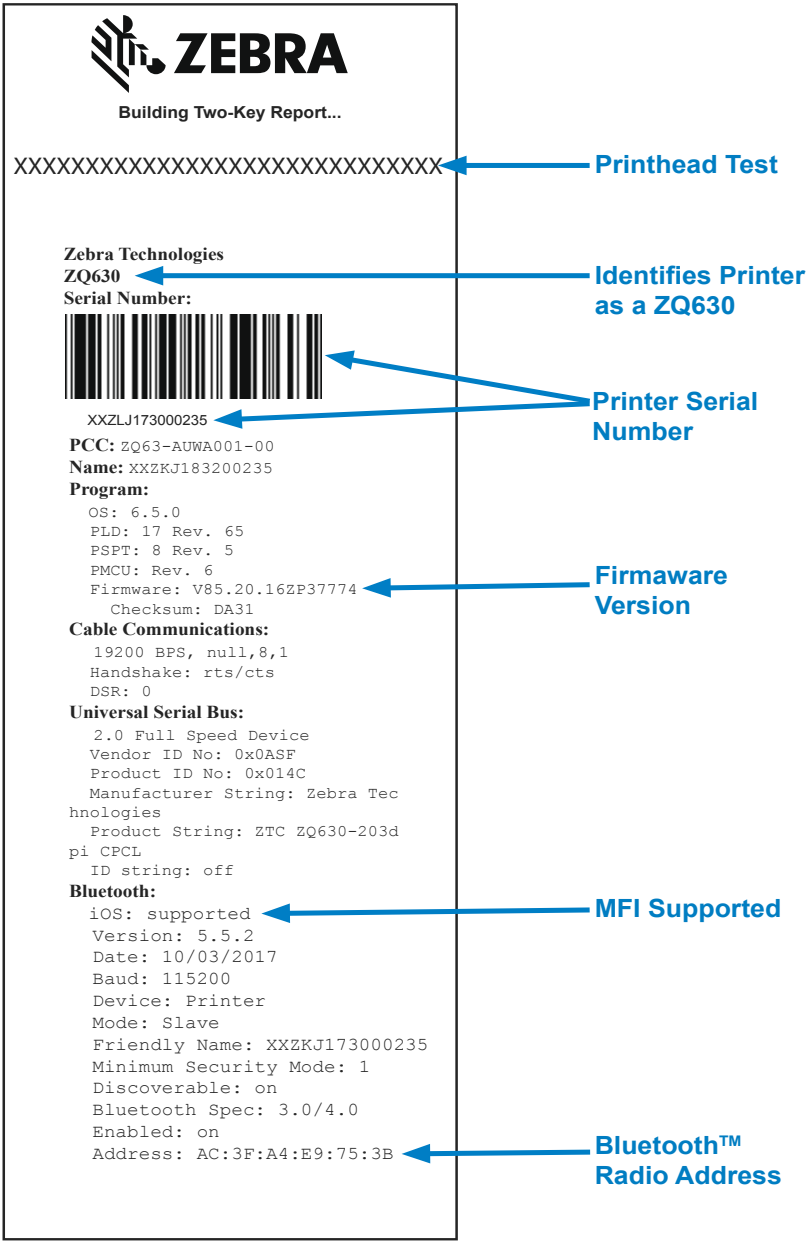

Figure 34a • ZQ630 Configuration Label (cont.)

AC3FA4E9753B

Wireless:

```
  Radio: 802.11 a/b/g/n/ac
  Region: usa/canada
  Country: usa/canada
  Enabled: on
  MAC Address: ac:3f:a4:C6:8D:40
  IP Address: 0.0.0.0
  Netmask: 255.255.255.0
  Gateway: 0.0.0.0
  Operating Mode: infrastructure
  International Mode: off
  Preamble Length: long
  Security: none
  Stored ESSID: 125
  Associated: no
  DHCP: on
  DHCP CID type: 1
  DHCP CID: ac3fa4e93753a
  Power Save: on
```

Ethernet:

```
  MAC Address: 00:07:4D:8B:4A:00
  IP Address: 0.0.0.0
  Netmask: 255.255.255.0
  Gateway: 0.0.0.0
  DHCP: on
  DHCP CID type: 1
  DHCP CID: 00074D8B4A00
```

Active Network Information:

```
  Active Network: Unknown
  IP Address: 0.0.0.0
  Netmask: 255.255.255.0
  Gateway: 0.0.0.0
  TCP Port: 6101
  Alternate TCP Port: 9100
  TCP JSON Config Port: 9200
  UDP Port: 6101
  Remote Server:
  Remote Server Port: 10013
  TCP: on
  UDP: on
  LPD: on
  DHCP: on
  BOOTP: on
  FTP: on
  HTTP: on
  SMTP: on
  POP3: on
  SNMP: on
  TELNET: on
  MIRROR: off
  UDP Discovery: on
  Weblink:
  DHCP CID type: 1
  DHCP CID: ac3fa4e9753a
```

Peripherals:

```
  LCD: Installed
```

802.11ac radio option installed. This section details the radio's network settings.

Ethernet Information

Network Information

Peripherals Installed

Figure 34b: ZQ630 Configuration Label (cont.)

```
Power Management:
  In-activity Timeout:36000 Secs
  Low-battery Timeout:60 Secs
  Remote (DTR) pwr-off:Disabled
  Voltage            :8.31
  Low-bat Warning    :8 %
  Low-bat Shut-down  :2 %
  Power On Cycles    :23
  Battery Health     :good
  Battery Cycle Count:0
Memory:
  Flash :134217728 Bytes
  RAM   :8388608 Bytes
Label:
  Width :824 dots, 103 mm
  Height:65535 dots, 8191 mm
Sensors: (Adj)
  Pres[DAC:132,Thr:60,Cur:159]
     Label Removed
  Media [204 (826 dots)]
  Black Bar [DAC:119,Thr:70,Cur:0
]
  Gap [DAC:132,Thr:50,Cur:131]
  Temperature :24C (67)
  Voltage     :8.3V (255)
Resident Fonts:
  Font       Sizes  Chars
  --------- -----  -----
  0           0- 6   20-FF
  1           0      20-80
  2           0- 1   20-59
  4           0- 7   20-FF
  5           0- 3   20-FF
  6           0      20-44
  7           0- 1   20-FF
File Directory:
  File              Size
  ---------------  --------
  E:2KEY.TXT            3507
  E:TT0003M_.TTF      169188
 134044672 Bytes Free
Command Language:
  CCL Key '!'[21]
ZPL Configuration Information:
  Rewind.........Print Mode
  Mark...........Media Type
  30.0............Darkness
  +00.......Tear Off Adjust
  2030.........Label Length
  72mm.........Print Width
  7Eh........Control Prefix
  2Ch............Delimiter
  00...........Top Position
  No Motion..Media Power Up
  Feed....Media Head Closed
  00............Left Margin
  576..........Dots per row
End ZPL Configuration
Print-head test: OK
 End of report

Press FEED key to
enter DUMP mode
```

Flash and RAM Memory Installed

Maximum Label Size

Resident Human Readable Fonts Installed

Files loaded in printer memory (includes pre-scaled or scalable fonts)

CPCL and ZPL programming languages are supported

Specifications

Note • Printer specifications are subject to change without notice.

Printing Specifications

Parameter	ZQ630
Print Width	Up to 104 mm (4.1 in.)
Print Speed	101.6 mm (4 in.)/second
	127 mm (5 in.)/second in Draft Mode
Printhead Burn Line to Tear Edge Distance	4.06 mm (0.16 in.) +/- .25 mm (.01”)
Printhead Life	No less than 1 million inches of media fed using Zebra media.
Print Density	203 dots/in. or better

Memory and Communications Specifications

Parameter	ZQ630
Flash Memory	512 MB[1]
RAM Memory	256 MB[1]
Standard Communications	RS-232 serial port (14 Pin serial connector) Configurable Baud rate (from 9600 to 115.2 Kbps), parity and data bits. Software (X-ON/X-OFF) or hardware (DTR/STR) communication handshake protocols.
	USB 2.0 Full Speed Interface (12 Mbps)
Wireless Communication Options	1. Dual Radio: 802.11ac with Bluetooth v4.1 (both Classic & BLE) 2. Bluetooth v4.1 (both Classic & BLE)
Real Time Clock (RTC)	Time and date under application control. Refer to ZPL Programming Manual, available at www.zebra.com/manuals for RTC commands.
Ethernet	10 or 100 mps Ethernet auto detect when docked in cradle.

1. Memory configuration on your printer may be ascertained by printing a configuration label as detailed on page 68.

Label Specifications

Parameter	ZQ630
Media Width	50.8 mm (2 in.) to 111 mm (4.4 in.) linered 50.8 mm (2 in.) to 109 mm (4.3 in.) linerless
Max/Min Label Length	12.7 to 812.8 mm (0.5 to 32 in.) maximum
Black Bar Sensor to Printhead Burnline Distance	15.87 mm (0.625 in.) +/- 0.635 mm (0.025 in.)
Media Thickness (except Tag)	3.2 to 7.5 mils (0.08128 to 0.1905 mm)
Max Tag Thickness	5.5 mils (0.1397 mm) or less
Max Label Roll Outer Diameter	66.8 mm (2.6 in.)
Inner Core Diameters**	19.05 mm (0.75 in.) or 34.925 mm (1.375 in.)
Black Mark Location	The reflective media black marks should be centered on media roll
Black Mark Dimensions	Minimum mark width: 12.7 mm (0.5 in.) Mark length: 2.4-11 mm (0.09 to 0.43 in.)

Note • Use Zebra brand direct thermal media that is outside wound. Media may be reflective (black mark) sensing, or transmissive (gap) sensing, die-cut, continuous or linerless. For die-cut labels, use only full auto dies.

***** ZQ630 printer support coreless media which is 19 mm (0.75 in.) in inner diameter.***

Physical, Environmental and Electrical Specifications

Parameter	ZQ630
Weight w/ battery and no media	2.45 lbs. (1.113 kg)
Temperature	Operating: -20 °C to 50 °C (-4 °F to 122 °F) with or without RFID option
	Storage: -25 °C to 65 °C (-13 °F to 149 °F) with or without RFID option
	Charging: 0 °C to 40°C (32 °F to 104 °F) with or without RFID option
Relative Humidity	Operating/Storage: 10% to 90% non-condensing with or without RFID option
Battery	Smart Battery (4 cell) Lithium-Ion, 7.4 VDC (nominal); 6.8 AHr min.
Intrusion Protection (IP) Rating	IP43 (without optional environmental case) IP54 (with case)

CPCL Font and Bar Code Specifications and Commands

Standard Fonts	25 bit-mapped fonts; 1 scalable font (CG Trimvirate Bold Condensed*) *Contains UFST from Agfa Monotype Corporation Downloadable optional bit-mapped & scalable fonts via Net Bridge software.	
Available Optional Fonts	Optional International character sets: Chinese 16 x 16 (trad), 16 x 16 (simplified),24 x 24 (simplified); Japanese 16 x 16, 24 x 24	
Linear Bar Codes Available	**Barcode (CPCL Command)**	
	Aztec (AZTEC) Codabar (CODABAR, CODABAR 16) UCC/EAN 128 (UCCEAN128) Code 39 (39, 39C, F39, F39C) Code 93 (93) Code 128 (128) EAN 8, 13, 2 and 5 digit extensions (EAN8, EAN82, EAN85, EAN13, EAN132, and EAN135) EAN-8 Composite (EAN8) EAN-13 Composite (EAN13) Plessey (PLESSEY) Interleaved 2 of 5 (I2OF5) MSI (MSI, MSI10, MSI1110) FIM/POSTNET (FIM) TLC39 (TLC39) UCC Composite A/B/C (128(Auto)) UPCA, 2 and 5 digit extensions (UPCA2 and UPCA5) UPCA Composite (UPCA) UPCE, 2 and 5 digit extensions (UPCE2 and UPCE5) UPCE Composite (UPCE) MaxiCode (MAXICODE) PDF 417 (PDF-417) Datamatrix (using ZPL emulation) (DATAMATRIX) QR Code (QR)	
2-D Bar Codes Available	RSS:	RSS-14 (RSS-Subtype 1) RSS-14 Truncated (RSS-Subtype 2) RSS-14 Stacked (RSS-Subtype 3) RSS-14 Stacked Omnidirectional (RSS-Subtype 4) RSS Limited (RSS-Subtype 5) RSS Expanded (RSS-Subtype 6)
Rotation Angles	0°, 90°, 180°, and 270°	

ZPL Font and Bar Code Specifications and Command

Standard Fonts	15 bit-mapped fonts; 1 scalable font (CG Trimvirate Bold Condensed*) Downloadable optional bit-mapped & scalable fonts via Net Bridge software.
Available Optional Fonts	Zebra offers font kits covering multiple languages including Simplified and Traditional Chinese, Japanese, Korean, Hebrew/Arabic, and others.
Linear Bar Codes Available **2-D Bar Codes Available**	**Barcode (CPCL Command)** Aztec (^B0) Codabar (^BK) Codablock (^BB) Code 11 (^B1) Code 39 (^B3) Code 49 (B4) Code 93 (^BA) Code 128 (^BC) DataMatrix (^BX) EAN-8 (^B8) EAN-13 (^BE) GS1 DataBar Omnidirectional (^BR) Industrial 2 of 5 (^BI) Interleaved 2 of 5 (^B2) ISBT-128 (^BC) LOGMARS (^BL) Micro-PDF417 (^BF) MSI (^BM) PDF-417 (^B7) Planet Code (^B5) Plessey (^BP) Postnet (^BZ) Standard 2 of 5 (^BJ) TLC39 (^BT) UPC/EAN extensions (^BS) UPC-A (^BU) UPC-E (^B9) Maxi Code (^BD) QR Code (^BQ)
Rotation Angles	0°, 90°, 180°, and 270°

Communication Ports

RS-232C

Pin #	Signal Name	Type	Description
1	CTS	input	Clear To Send from host
2	TXD	output	Transmit Data
3	RXD	input	Receive Data
4	DSR	input	Data Set Ready: low to high transition turns printer on, high to low transition turns printer off (if enabled)
5	GND		Ground
6	DTR	output	Data Terminal Ready: set high when printer is on. Switched 5V (300mA max)
7	N/A		Do Not Use
8	RTS	output	Request To Send set high when printer is ready to accept a command or data
9	N/A		Do Not Use
10	N/A		Do Not Use
11	N/A		Do Not Use
12	N/A		Do Not Use
13	N/A		Do Not Use
14	N/A		Do Not Use

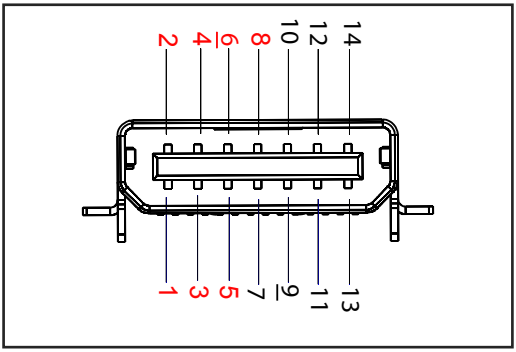

Figure 35 • RS-232C Communication Port

USB

Pin #	Signal Name	Type	Description
1	VBUS	-	USB Bus Power
2	USB-	bi-directional	I/O signals
3	USB+	bi-directional	I/O signals
4	USB_ID	-	Identifies A/B connector
5	Return		Ground

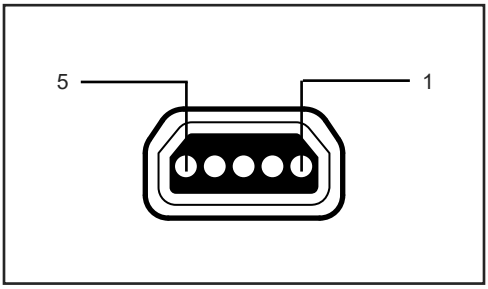

Figure 36 • USB Communication Port

Figure 37 • ZQ630 Dimensions

Figure 38 • ZQ630 Mounting Hole Dimensions

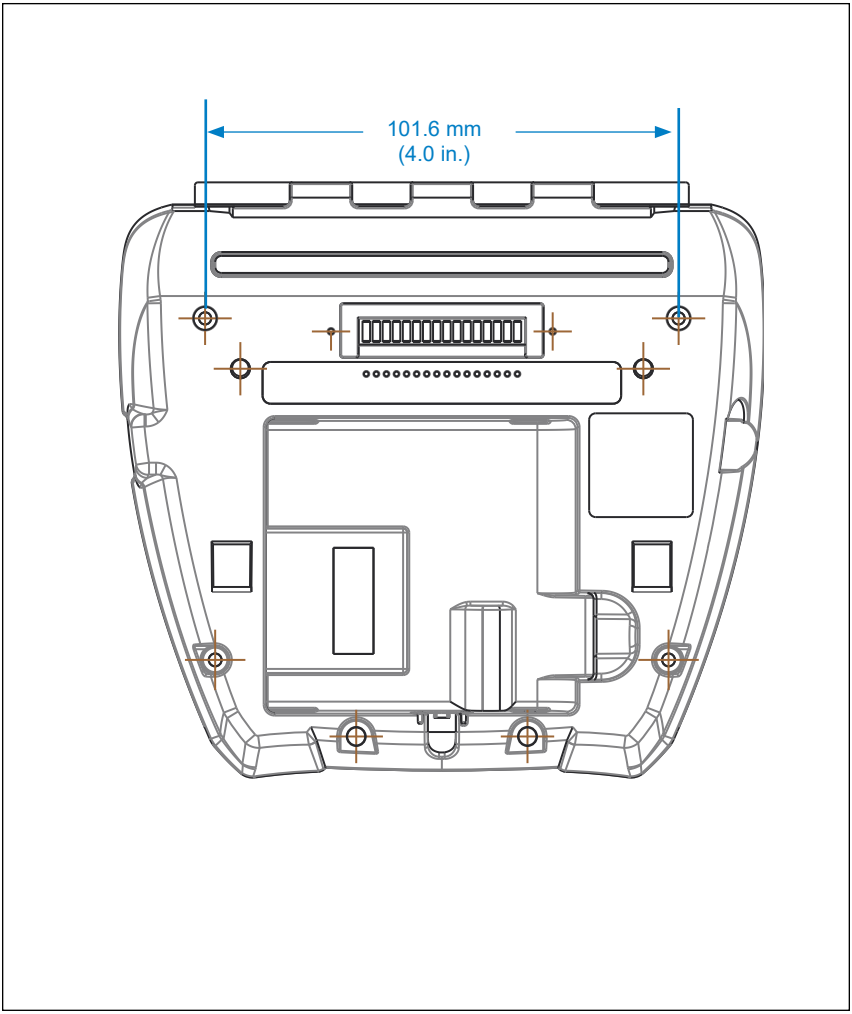

Use two (2) M2.5 x 0.45 screws in the indicated positions above.

ZQ630 Accessories

Part #	Description
BTRY-MPP-68MA1-01	KIT ACC ZQ630 SPARE SMART BATTERY
P1050667-007	KIT ACC QLn420 RUBBER DOOR I/O (15)
P1050667-010	KIT ACC QLn420 RUBBER DOOR DC JACK (15)
P1050667-017	KIT ACC QLn4/ZQ630 SOFT CASE (Includes Shoulder Strap)
P1050667-018	KIT ACC QLn4/ZQ63 -EC AC ADAPTER US (type A) CORD
P1050667-019	KIT ACC QLn4/ZQ63-EC AC ADAPTER UK (type G) CORD
P1050667-020	KIT ACC QLn4/ZQ63-EC AC ADAPTER EU/CHILE (type C) CORD
P1050667-021	KIT ACC QLn4/ZQ63-EC, AC ADAPTER, JAPAN CORD
P1050667-022	KIT ACC QLn4/ZQ6-EC AC ADAPTER BRAZIL CORD
P1050667-023	KIT ACC QLn4/ZQ63-EC AC ADAPTER ARGENTINA CORD
P1050667-024	KIT ACC QLn4/ZQ63-EC AC ADAPTER AUSTRALIA (type I) CORD
P1050667-025	KIT ACC QLn4/ZQ63-EC, AC ADAPTER,CN CORD
P1050667-026	KIT ACC QLn4/ZQ63-VC – 15V – 60V to 12V
P1050667-027	KIT ACC QLn4/ZQ63-EC, AC ADAPTER,TAIWAN CORD
P1050667-028	KIT ACC QLn4/ZQ63-EC AC ADAPTER, ISRAEL CORD
P1050667-029	KIT ACC QLn4/ZQ63-EC (NO ADAPTER, NO CORD)
P1050667-030	KIT ACC QLn4/ZQ63-VC (no adapter, no cord)
P1050667-031	KIT ACC QLn4/ZQ63 METAL BELT CLIP
P1050667-032	KIT ACC QLn4/ZQ63 Handi-Mount (compact, flexible RAM arm) with Base Plate
P1050667-033	KIT ACC QLn4/ZQ63 Handi-Mount (compact, flexible RAM arm) without Base Plate
P1050667-034	KIT ACC QLn4/ZQ63 ASSY HARD CASE W/METAL BELT CLIP
P1050667-035	KIT ACC QLn4/ZQ63 Mobile Mount for Forklifts (with U-arm bracket and fanfold bin)
P1050667-037	KIT ACC QLn4/ZQ63 MOBILE MOUNT PLATE
P1050667-038	KIT ACC QLn/ZQ6 DESKTOP STAND
P1050667-041	KIT ACC QLn4/ZQ63 BATTERY ELIMINATOR NO ADAPTER
P1050667-047	KIT ACC QLn4/ZQ63 RAM MOUNT PLATE
P1031365-024	KIT ACC,QLn/ZQ5/ZQ6,AC ADAPTER,US (type A) Cord

ZQ630 Accessories cont.

P1031365-060	KIT ACC QLn/ZQ6 11 PIN Serial Cable (with strain relief) to MC3000
P1031365-061	KIT ACC QLn/ZQ6 Serial DEX Cable (with strain relief)
P1031365-062	KIT ACC QLn/ZQ6 Serial Cable (with strain relief) to RJ45
P1031365-063	Kit ACC SC2 Li-ION SMART CHARGER, US (type A) cord
P1031365-064	Kit ACC SC2 Li-ION SMART CHARGER, UK (type G) cord
P1031365-065	Kit ACC SC2 Li-ION SMART CHARGER, EU/CHILE (type C) cord
P1031365-066	Kit ACC SC2 Li-ION SMART CHARGER, AUSTRALIA (type I) cord
P1031365-067	Kit ACC SC2 Li-ION SMART CHARGER, BRAZIL
P1031365-068	Kit ACC SC2 Li-ION SMART CHARGER, CHINA CORD
P1031365-083	KIT ACC,QLn/ZQ5/ZQ6,AC ADAPTER, ARGENTINA CORD
P1031365-088	KIT ACC SC2 LI-ION SMART CHARGER, ISREAL CORD
P1031365-089	KIT,ACC,SC2 LI-ION SMART CHARGER,ARGENTINA CORD
P1031365-093	KIT ACC,QLn/ZQ5/ZQ6,AC ADAPTER,TAIWAN CORD
P1031365-094	KIT ACC,QLn/ZQ5/ZQ6,AC ADAPTER,JAPAN CORD
P1031365-095	KIT ACC SC2 LI-ION SMART CHARGER, TAIWAN CORD
P1031365-096	KIT ACC SC2 LI-ION SMART CHARGER, JAPAN CORD
P1031365-192	KIT ACC QLn SERIES SHOULDER STRAP
P1031365-104	KIT ACC QLn SERIAL CABLE (with strain relief) to LS2208 SCANNER EXTENDED
AC18177-5	MODEL UCLI72-4 QUAD BATTERY CHARGER (US line cord, see Sales for others)
SAC-MPP-3BCHGUS1-01	3-SLOT BATTERY CHARGER
SAC-MPP-6BCHUS1-01	DUAL 3-Slot BATTERY CHARGER
SAC-MPP-1BCHGUS1-01	1-SLOT BATTERY CHARGER
VAM-MPP-VHCH1-01	VEHICLE ADAPTER
P1065668-008	KIT,ACC,QLn,AC ADAPTER,STRAIGHT,30W,HC with US (type A) CORD
SG-MPP-Q4HLSTR1-01	KIT,WAIST,STRAP,QLn420

Note • Refer to Appendix A for additional information on Data I/O cables.

Interface Cables (RS-232 Cables)

Part Number P1031365-053; DB-9 to 14-Pin Serial

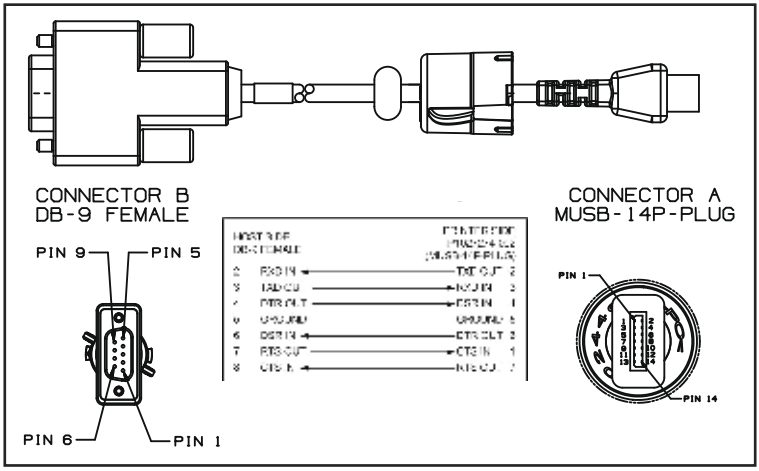

Part Number P1031365-052; 8-Pin DIN to 14-Pin Serial Cable

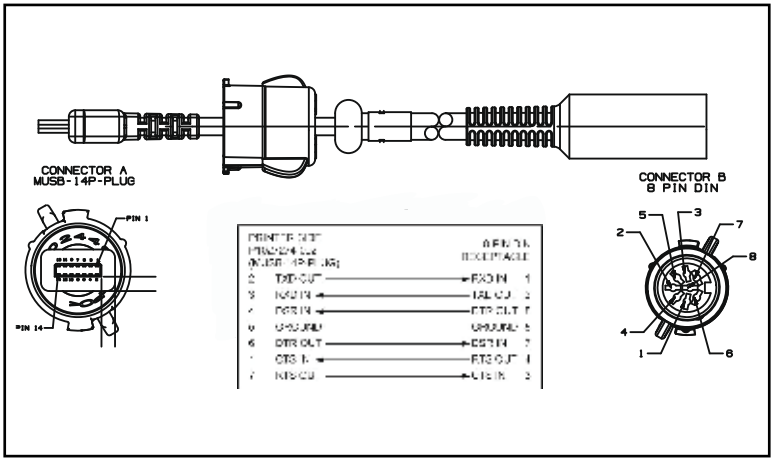

USB Cables

Part Number AT17010-1; USB A to USB Mini B Cable

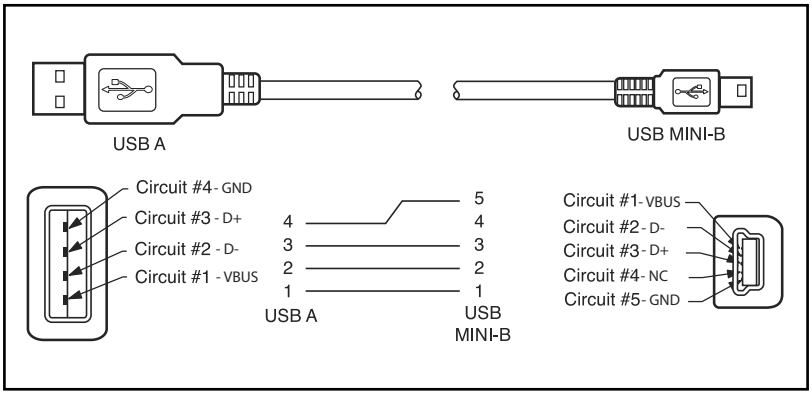

Part Number P1031365-055; 4 Position USB Mini to 4-Pin USB (w/ Strain Relief)

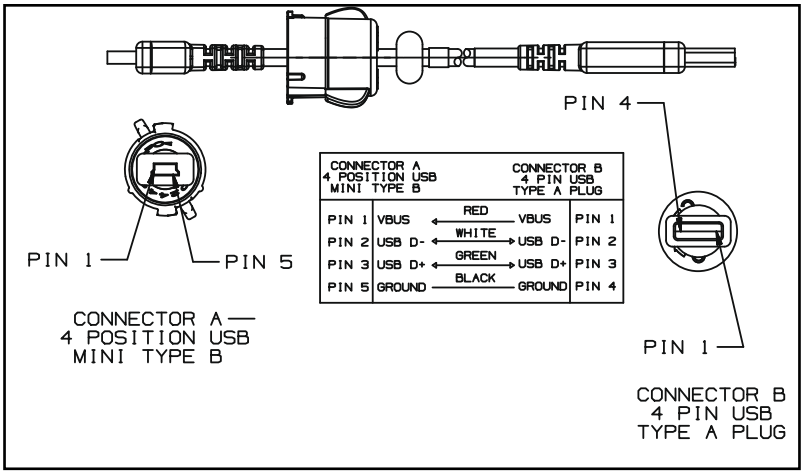

Note • Visit the Zebra website at: www.zebra.com/accessories for a listing of interface cables for all Zebra mobile printers.

Appendix B

Media Supplies

To insure maximum printer life and consistent print quality and performance for your individual application, it is recommended that only media produced by Zebra be used. This includes Zebra RFID media made for the ZQ630. Non-Zebra RFID media may not pass RFID calibration.

Advantages include:

- Consistent quality and reliability of media products.
- Large range of stocked and standard formats.
- In-house custom format design service.
- Large production capacity which services the needs of many large and small media consumers including major retail chains world wide.
- Media products that meet or exceed industry standards.

For more information go the Zebra website (www.zebra.com) and select the Products tab, or refer to the CD included with the printer.

Note • It is recommended that linerless media be stored at temperatures between 20°C and 35°C.

Appendix C

Maintenance Supplies

In addition to using quality media provided by Zebra, it is recommended that the printer be cleaned as prescribed in the maintenance section. The following item is available for this purpose:

- Cleaning Pen (12 pack): p/n 105950-035

SETTINGS Menu

DARKNESS -49
🏠

Set the darkness to the lowest setting that provides good print quality. If you set darkness too high, the label image may print unclearly, bar codes may not scan correctly, or the printhead may wear prematurely.

SGD: `print.tone_zpl`

PRINT SPEED 4.0
🏠

Select the speed for printing a label (given in inches per second). Slower print speeds typically yield better print quality.

SGD: `media.speed`

MEDIA TYPE MARK
🏠

Select the type of media that you are using.

SGD: `ezpl.media_type`

TEAR OFF 0
🏠

If necessary, adjust the position of the media over the tear bar after printing.

SGD: `ezpl.tear_off`

PRINT WIDTH

576

Specify the width of the labels being used. The default value is the maximum width for the printer based on the printhead's DPI value.

SGD: `ezpl.print_width`

PRINT MODE

REWIND

Select a print mode that is compatible with your printer options.

SGD: `ezpl.print_mode`

LABEL TOP

0

If necessary, shift the position of the image vertically on the label.
• Negative numbers move the image higher on the label (toward the printhead).
• Positive numbers move the image farther down on the label (away from the printhead) by the specified number of dots.
SGD: `zpl.label_top`

LEFT POSITION

0

If necessary, shift the print position horizontally on the label. Positive numbers move the left edge of the image toward the center of the label by the number of dots selected, while negative numbers move the left edge of the image toward the left edge of the label.
SGD: `zpl.left_position`

REPRINT MODE

OFF

When reprint mode is enabled, you can reprint the last label printed either by issuing certain commands or by pressing the DOWN ARROW on the keypad.

SGD: `ezpl.reprint_mode`

LABEL LENGTH MAX

39

Set the maximum label length to a value that is at least 1.0 in. (25,4 mm) greater than the actual label length plus the interlabel gap. If you set the value to one that is smaller than the label length, the printer assumes that continuous media is loaded, and the printer cannot calibrate.
SGD: `ezpl.label_length_max`

LANGUAGE

ENGLISH

If necessary, change the language that the printer displays.
SGD: `display.language`

Note • The selections for this parameter are displayed in the actual language to make it easier to find one that you are able to read.

TOOLS Menu

PRINT INFORMATION

SETTINGS

PRINT

Prints a printer configuration label, sensor profile, barcode information, font information, images, formats, two-key report, and network settings.

SGD: `device.user_vars.display_wmlsg_printlist`

BACKLIGHT TIMEOUT

10

Sets the duration of the LCD backlight in seconds.

SGD: `display.backlight_on_time`

POWER UP ACTION

NO MOTION

Set the action for the printer to take during the power-up sequence, i.e. no motion, calibrate, etc.

SGD: `ezpl.power_up_action`

HEAD CLOSE ACTION

FEED

Set the action for the printer to take when you close the printhead, i.e. feed, calibrate, etc.

SGD: `ezpl.head_close_action`

LOAD DEFAULTS

FACTORY

Restore specific printer, print server, and network settings back to the factory defaults. Use care when loading defaults because you will need to reload all settings that you changed manually. This menu item is available through two user menus with different default values for each.
SGD: `ezpl.load_defaults`

LABEL LENGTH CAL

Calibrate the printer to adjust the length of the label.

DIAGNOSTIC MODE

▼ ENABLED ▲

Use this diagnostic tool to cause the printer to output the hexadecimal values for all data received by the printer.

SGD: `device.user_vars.display_diagnostic_list`

ZBI ENABLED?

▼ NO ▲

This menu item indicates if the Zebra Basic Interpreter (ZBI 2.0™.) option is enabled on your printer. If you would like to purchase this option, contact your Zebra reseller for more information.

SGD: `zbi.key`

PASSWORD PROTECT

▼ SELECTED ▲

Select the level of password protection for user menu items. The default printer password is 1234.

SGD: `display.password.level`

NETWORK Menu

ACTIVE PRINT SERVER

NONE

Informs the user of the presence of an active server. Only one print server can be installed at a time, therefore the print server installed is the active print server.

SGD: `ip.active_network`

PRIMARY NETWORK

WIRELESS

View or modify whether the wireless print server is considered primary. You may select which one is primary.

SGD: `ip.primary_network`

WLAN IP ADDRESS

0.0.0.0

View, and if necessary, change the printer's WLAN IP address.

SGD: `wlan.ip.addr`

WLAN SUBNET MASK

255.255.255.0

View, and if necessary, change the WLAN subnet mask.

SGD: `wlan.ip.netmask`

WLAN GATEWAY

0.0.0.0

View, and if necessary, change the default WLAN gateway.

SGD: `wlan.ip.gateway`

WLAN IP PROTOCOL

ALL

This parameter tells if the user (permanent) or the server (dynamic) selects the WLAN IP address.

SGD: `wlan.ip.protocol`

WLAN MAC ADDRESS

00:19:70:7A:20:44

View the WLAN Media Access Control (MAC) address of the wireless print server that is installed in the printer.

SGD: `wlan.mac_addr`

ESSID

DSF802LESS54

The Extended Service Set Identification (ESSID) is an identifier for your wireless network. This setting, which cannot be modified from the control panel, gives the ESSID for the current wireless configuration.

SGD: `wlan.essid`

AP MAC ADDRESS

00:05:9A:3C:78:00

View the AP MAC address associated with the printer.

SGD: `wlan.bssid`

CHANNEL

View the wireless channel being used when the wireless network is active and authenticated.

SGD: `wlan.channel`

SIGNAL

0

View the wireless signal strength when the wireless network is active and authenticated.

SGD: `wlan.signal_strength`

WIRED IP ADDRESS

0.0.0.0

View, and if necessary, change the printer's wired IP address.

SGD: `internal_wired.ip.addr`

WIRED SUBNET MASK

255.255.255.0

View, and if necessary, change the printer's wired subnet mask.

SGD: `internal_wired.ip.netmask`

WIRED GATEWAY

0.0.0.0

View, and if necessary, change the wired gateway setting.

SGD: `internal_wired.ip.gateway`

WIRED IP PROTOCOL

ALL

This parameter tells if the user (permanent) or the server (dynamic) selects the IP address. If a dynamic option is chosen, this parameter tells the method(s) by which the wired or wireless server receives the IP address from the server.

SGD: `internal_wired.ip.protocol`

WIRED MAC ADDRESS

00:07:4D:3F:D3:B2

View, and if necessary, change the printer's network signal.

SGD: `internal_wired.mac_addr`

IP PORT

6101

This printer setting refers to the internal wired print servers port number that the TCP print service is listening on. Normal TCP communications from the host should be directed to this port.

SGD: `ip.port`

IP ALTERNATE PORT

9100

This command sets the port number of the alternate TCP port.

SGD: `ip.port_alternate`

PRINT INFORMATION

NETWORK

Print the specified information on one or more labels. This menu item is available through three user menus with different default values for each.

SGD: `device.user_vars.display_wmlsgd_printlist`

RESET NETWORK

This option resets the wired or wireless print server and saves any changes that you made to any network settings.

VISIBILITY AGENT

When the printer is connected to a wired or wireless network, it will attempt to connect to Zebra's Asset Visibility Service via the Cloud-based Zebra Printer Connector using an encrypted, certificate-authenticated web socket connection. The printer sends Discovery Data and Settings and Alerts Data. Data printed via any label formats is NOT transmitted. To opt out of this feature, disable this setting.

SGD: `weblink.zebra_connector.enable`

LOAD DEFAULTS

NETWORK

Restore specific printer, print server, and network settings back to the factory defaults. Use care when loading defaults because you will need to reload all settings that you changed manually. This menu item is available through two user menus with different default values for each.

SGD: `ezpl.load_defaults`

RFID Menu

RFID STATUS

RFID OK

Display the status of the RFID subsystem of the printer.

SGD: `rfid.error.response`

RFID CALIBRATE

Initiate tag calibration for RFID media. (Not the same as media calibration.) During the process, the printer moves the media, calibrates the RFID tag position, and determines the optimal settings for the RFID media being used.

SGD: `rfid.tag.calibrate`

READ RFID DATA
EPC
NONE

Read and return the specified tag data from the RFID tag.

SGD: `rfid.tag.read.content` & `rfid.tag.read.execute`

RFID TEST

During the RFID test, the printer attempts to read and write to a transponder.

SGD: `rfid.tag.test` & `rfid.tag.test.execute`

RFID PROGRAM POS.

FO

If the desired programming position (read/write position) is not achieved through RFID tag calibration, a value may be specified.

SGD: `rfid.position.program`

RFID READ POWER

16

If the desired read power is not achieved through RFID tag calibration, a value may be specified.

SGD: `rfid.reader_1.power.read`

RFID WRITE POWER

16

If the desired write power is not achieved through RFID tag calibration, a value may be specified.

SGD: `rfid.reader_1.power.write`

RFID VALID COUNT

0

Resets the RFID valid label counter to zero.

SGD: `odometer.rfid.valid_resettable`

RFID VOID COUNT

0

Resets the RFID void label counter to zero.

SGD: `odometer.rfid.void_resettable`

LANGUAGES Menu

LANGUAGE

▼ ENGLISH ▲

If necessary, change the language that the printer displays.

SGD: `display.language`

Note • The selections for this parameter are displayed in the actual languages to make it easier to find one that you are able to read.

COMMAND LANGUAGE

▼ HYBRID_XML_ZPL ▲

View or select the appropriate command language.

SGD: `device.languages`

COMMAND CHAR

^ (5E)

The format command prefix is a two-digit hex value used as a parameter place marker in ZPL/ZPL II format instructions. The printer looks for this hex character to indicate the start of a ZPL/ZPL II format instruction. Set the format command character to match what is used in your label formats.

SGD:`zpl.format_prefix`

CONTROL CHAR

~ (7E)

Set the control prefix character to match what is used in your label formats.

SGD: `zpl.command_prefix`

DELIMETER CHAR

, (2E)

The delimiter character is a two-digit hex value used as a parameter place marker in ZPL/ZPL II format instructions. Set the delimiter character to match what is used in your label formats.

SGD: `zpl.delimiter`

ZPL MODE

ZPL II

Select the mode that matches what is used in your label formats. This printer accepts label formats written in either ZPL or ZPL II, eliminating the need to rewrite any ZPL formats that already exist. The printer remains in the selected mode until it is changed in one of the ways listed here.

SGD: `zpl.zpl_mode`

VIRTUAL DEVICE

NONE

If any Virtual Device apps are installed on your printer, you may view or enable/disable them from this user menu. For more information about Virtual Devices, go to the User Guide for the appropriate Virtual Device, or contact your local reseller.

SGD: `apl.selector`

SENSORS Menu

MEDIA STATUS

OK

Informs the user of the presence or absence of media in the printer.

SGD: `media.status`

LABEL LENGTH CAL

SGD: `zpl.calibrate`

TAKE LABEL

0

Set the intensity of the take label LED.

SGD: `ezpl.take_label`

Note • This value is set during sensor calibration. Do not change this setting unless you are told to do so by Zebra Technical Support or by an authorized service technician.

BLUETOOTH Menu

BLUETOOTH ADDRESS

NO BLUETOOTH RADIO

View the Bluetooth address for the presence of a BT radio.

SGD: `bluetooth.address`

MODE

SLAVE

View the Bluetooth connection pair printer's device type—Slave will always be displayed.

DISCOVERY

ON

Select if the printer is "Discoverable" for Bluetooth device pairing. View the discovery status, i.e. ON or OFF.

SGD: `bluetooth.discoverable`

CONNECTED

NO

View the connection status of the BT radio, i.e. YES or NO.

SGD: `bluetooth.connected`

BT SPEC VERSION

NO RADIO

View the Bluetooth operational specification level.

SGD: `bluetooth.radio_version`

MIN SECURITY MODE

1

View, and change if necessary, the minimum level of applied security of the BT radio.

SGD: `bluetooth.minimum_security_mode`

MFI CAPABILITY

PRESENT

Informs the user of the presence or availability of Made for iPhone (MFi) capability.

SGD: `device.feature.mfi`

BAUD RATE

19200

Select the baud value that matches the one being used by the host computer.

SGD: `comm.baud`

DATA BITS

8

Select the data bits value that matches the one being used by the host computer.

SGD: `comm.data_bits`

PARITY

NONE

Select the parity value that matches the one being used by the host computer.

SGD: `comm.parity_alt`

HOST HANDSHAKE

RTS/CTS

Select the handshake protocol that matches the one being used by the host computer.

SGD: `comm.handshake`

HALT ON ERROR

▼ YES ▲

SGD: `comm.halt`

BATTERY Menu

HEALTH

GOOD

Indicates the current health of the battery, i.e. Good, Past Useful Life, etc.

SGD: `power.health`

CYCLE COUNT

3

View the current charging cycle count of the battery.

SGD: `power.cycle_count`

SERIAL NUMBER

Indicates the serial number of the battery pack.

SGD: `power.serial_number_string`

TIMEOUT (SECONDS)

0

View, and if necessary, change the battery timeout.

SGD: `power.inactivity_timeout_alt`

VOLTAGE

8.54

View the current voltage level of the battery pack.

SGD: `power.voltage`

WARNING

6.87 (176)

SGD: `power.low_battery_warning`

DTR CONTROL

OFF

SGD: `power.dtr_power_off`

PREDICTED CAPACITY

▼ 100% ▲

SGD: `power.relative_state_of_charge`

BATTERY CAPACITY

▼ MAH ▲

Battery capacity measured in mAH.

SGD: `power.remaining_capacity`

CHARGER STATUS

BATTERY PRESENT

Indicates the presence of a battery charger.

SGD: `power.chrgr_status`

BATTERY HEALTH

SGD: `power.percent_health`

Appendix E

Serial and PCC Number Locations for ZQ630 printer

Important • Due to compliance and customs restraints, an integrator may not be able to ship a printer purchased in one country to another country based on the limitations imposed by regional SKUs. The country code identified in the printer SKU determines the area of the world in which the printer can be used.

Battery Disposal

The EPA certified RBRC® Battery Recycling Seal on the Lithium-Ion (Li-Ion) battery supplied with your printer indicates Zebra Technologies Corporation is voluntarily participating in an industry program to collect and recycle these batteries at the end of their useful life, when taken out of service in the United States or Canada. The RBRC program provides a convenient alternative to placing used Li-Ion batteries into the trash or the municipal waste stream, which may be illegal in your area.

Important • When the battery is depleted, insulate the terminals with tape before disposal.

Please call 1-800-8-BATTERY for information on Li-Ion battery recycling and disposal bans/restrictions in your area.

Zebra Technologies Corporation's involvement in this program is part of our commitment to preserving our environment and conserving our natural resources.

Outside North America, please follow local battery recycling guidelines.

Product Disposal

The majority of this printer's components are recyclable. Do not dispose of any printer components in unsorted municipal waste. Please dispose of the battery according to your local regulations, and recycle the other printer components accordingto your local standards.

For more information, please see our web site at: http://www.zebra.com/environment.

ULINE H-8740
1-800-295-5510

Using Zebra.com

The following examples illustrate the search function on Zebra's website for finding specific documents and downloads.

Example 1: Find the ZQ630 User Guide.

Go to http://www.zebra.com/us/en/support-downloads.html

Type the appropriate printer name in search box.

Click on the "Get Support" button for How-To videos, manuals, drivers, firmware and software & utilities

Click on “Manuals” tab to access all printer documentation.

Click on the dropdown menu to choose your language and then click on the download button next to the selected manual.

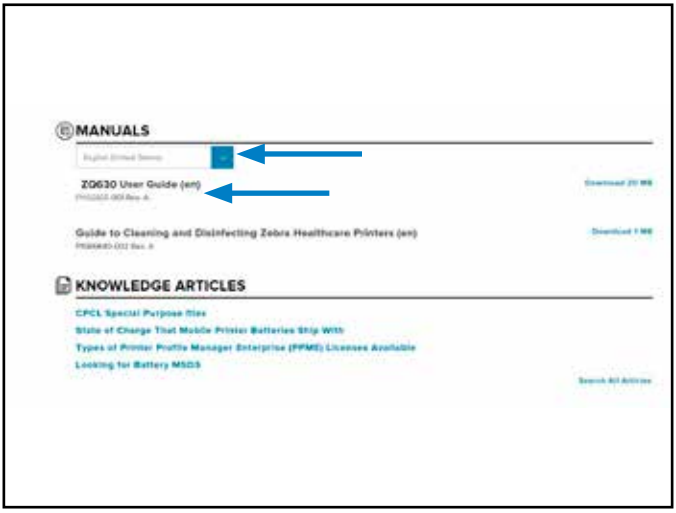

Product Support

When calling with a specific problem regarding your printer, please have the following information on hand:

- Model number/type (e.g. ZQ630)
- Unit serial number (refer to Appendix E)
- Product Configuration Code (PCC) (refer to Appendix E)

In the Americas contact:

Regional Headquarters	Technical Support	Customer Service Dept.
Zebra Technologies Corporation 3 Overlook Point Lincolnshire, Illinois 60069 U.S.A. T: +1 847 634 6700 Toll Free: +1 866 230 9494 F: +1 847 913 8766	T: +1 877 275 9327 F: +1 847 913 2578 Hardware: ts1@zebra.com Software: ts3@zebra.com	For printers, parts, media, and ribbon, please call your distributor, or contact us. T: +1 877 275 9327 E: clientcare@zebra.com

In Europe, Africa, the Middle East, and India contact:

Regional Headquarters	Technical Support	Customer Service Dept.
Zebra Technologies Europe Limited Dukes Meadow Millboard Road Bourne End Buckinghamshire SL8 5XF, UK T: +44 (0)1628 556000 F: +44 (0)1628 556001	T: +44 (0) 1628 556039 F: +44 (0) 1628 556003 E: Tseurope@zebra.com	For printers, parts, media, and ribbon, please call your distributor, or contact us. T: +44 (0) 1628 556032 F: +44 (0) 1628 556001 E: cseurope@zebra.com

In the Asia Pacific region contact:

Regional Headquarters	Technical Support	Customer Service Dept.
Zebra Technologies Asia Pacific Pte. Ltd. 71 Robinson Road #05-01/02/03 Parakou Building Singapore 068913 T: +65 6858 0722 F: +65 6885 0838	T: +65 6858 0722 F: +65 6885 0838 E: (China) tschina@zebra.com All other areas: tsasiapacific@zebra.com	For printers, parts, media, and ribbon, please call your distributor, or contact us. T: +65 6858 0722 F: +65 6885 0836 E: (China) order-csr@zebra.com All other areas: csasiapacific@zebra.com

Index

A

Accessories 56–80, 81
Adaptive Print Performance 41
Alert Messages 38
Appendix A, USB Cables 83
Appendix B, Media Supplies 85
Appendix C, Maintenance Supplies 85
Appendix D, Parameters Menus 86
Appendix E, Serial and PCC 107
Appendix F, Battery Disposal 108
Appendix G, Using Zebra.com 109
Appendix H, Product Support 111

B

Battery, installing 18
Battery pack
  Power Precision 11
Battery Safety 21
Belt Clip 56
Black Mark Dimensions 52
Bluetooth 46
Bluetooth, minimum security modes 48
Bluetooth, networking 46
Bluetooth, security modes 47

C

Cable Communication 43
Charger, battery 21–27
  1-Slot Charger 25
  3-Slot Charger 26
  Ethernet Cradles 23
Charger Safety 21
Communication Port 77
Communications Diagnostics 68
Configuration Label, sample 70
CPCL Font and Bar Code Specifications and Commands 74
Cradles, Ethernet and Charging 23

D

Designing Labels 50
Dimensions, ZQ620 79
Document Conventions 8
Draft Mode 41

E

Ethernet Cradles 23

G

General Cleaning Instructions 62
Getting Ready to Print 18

H

Hard Case 60
Home Menu Screen 36
Home Screen Icons & Parameters 38

I

Installing the Battery 18
Introduction to the ZQ6 Printers 9

L

Label Areas 52
Label Design Examples 53
LCD Control Panel 33, 65

M

Made for iPhone (MFi) 13
Media, loading 27
Mounting Dimensions ZQ620 80

N

Near Field Communication (NFC) 13, 54

P

Power Save Mode 40
Power-Up Sequences 39
Preventive Maintenance 62
Printer Status Icons 34
Printing Method
  Direct Thermal 12
Programming language

CPCL 9

Q

QR Code 12

R

RS-232C Communications 43

S

Shoulder Strap 57
Sleep Mode 40
Smart Battery, PowerPrecision+ 11
Smart Charger-2 (SC2) Single Battery Charger 21
Soft Case 58, 60, 61
Specifications, label 74
Specifications, memory and communications 73
Specifications, physical, environmental and electrical 78
Specifications, printing 73
Status Bar Icons 34

T

Troubleshooting, tests 68
Troubleshooting, topics 66

V

Verify printer is working 42

W

Waist Holder 61
Wearing the Printer 56
WLAN, overview 49

Z

Zebra Setup Utilities 45
Zebra Setup Utility (Android) 45
ZPL Font and Bar Code Specifications and Commands 76
ZQ6 Accessories 81