ULINE H-4210

FABRIC SLED BASE CHAIR WITH ARMS

1-800-295-5510
uline.com

TOOL NEEDED

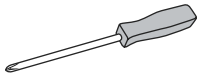

Phillips Screwdriver

PARTS LIST

1	Seat Cushion x 1	2	Back Cushion x 1	3	Side Frame x 2
		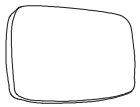			
4	Screw x 8 M8 x 20mm	5	Screw x 4 M6 x 25mm		
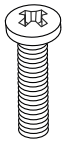		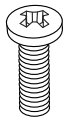			

ASSEMBLY INSTRUCTIONS

Step 1

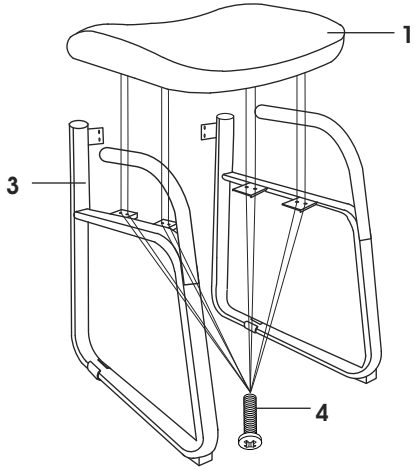

Do not tighten screws until the end.

Step 2

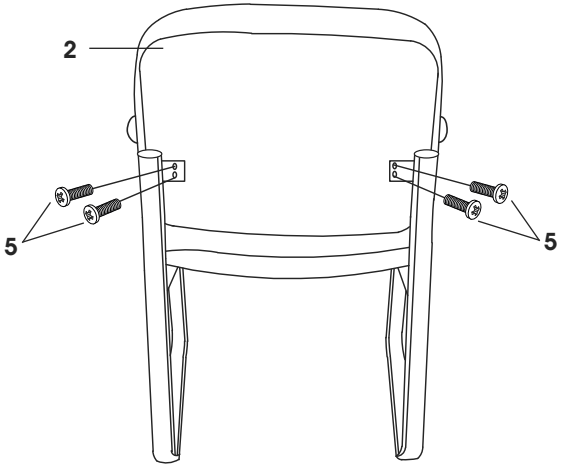

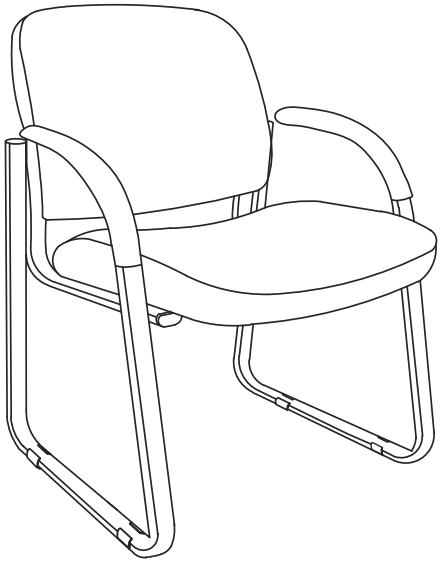

Tighten all screws securely.