ULINE H-1053, H-1852
H-2059

RUBBERMAID® SERVICE CART

1-800-295-5510
uline.com

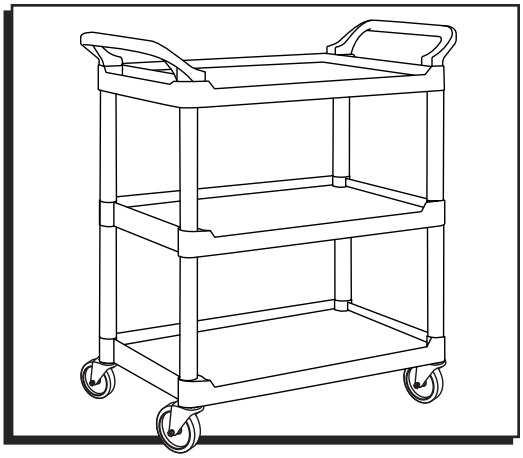

TOOLS NEEDED

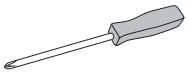

Phillips Screwdriver

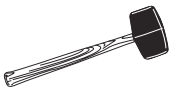

Rubber Mallet

PARTS

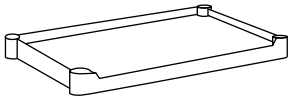

Shelf x 1
(H-2059 x 2)

Top x 1

Base x 1

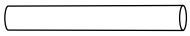

Upright x 8
(H-2059 x 12)

Handle x 2

Screw x 4

Caster x 4

Caster Mount x 4

ASSEMBLY

NOTE: Use rubber mallet for steps 1-5.

1. Tap caster mounts into openings on underside of base, then tap casters into caster mounts. (See Figure 1)

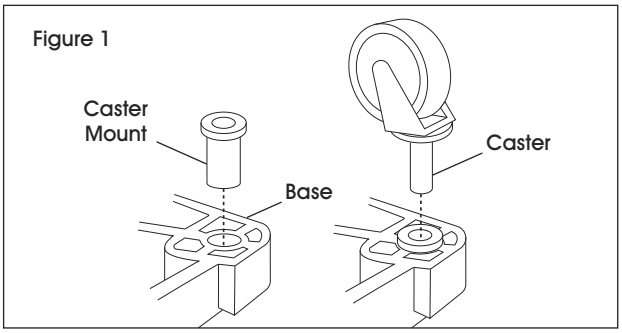

Figure 1

2. Flip base onto casters. Insert upright into hole on top of base. Repeat for remaining three openings on base. (See Figure 2)

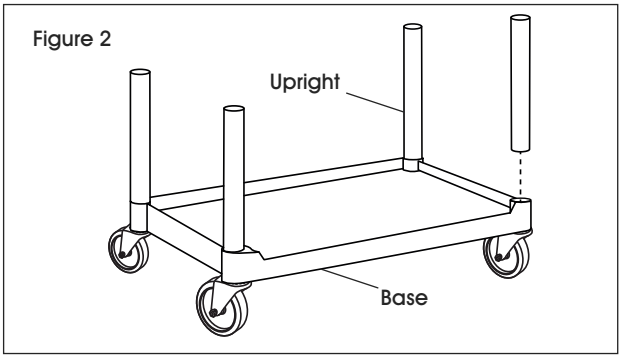

Figure 2

3. Connect underside of shelf to top of each upright. (See Figure 3)

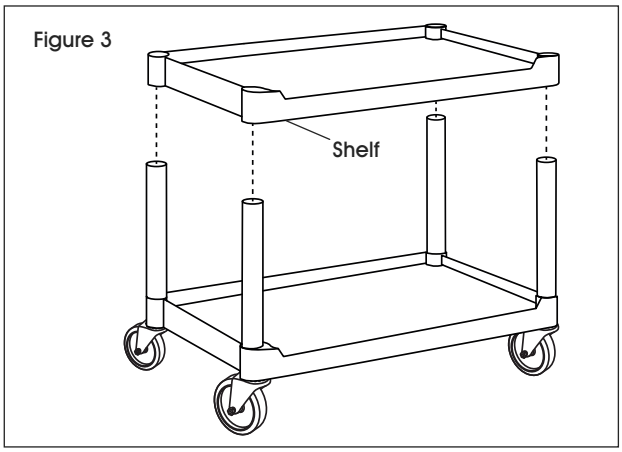

Figure 3

NOTE: Repeat steps 2-3 for additional shelf (H-2059).

4. Insert handle into top and use screws to secure through underside of top. Repeat on opposite side. (See Figure 4)

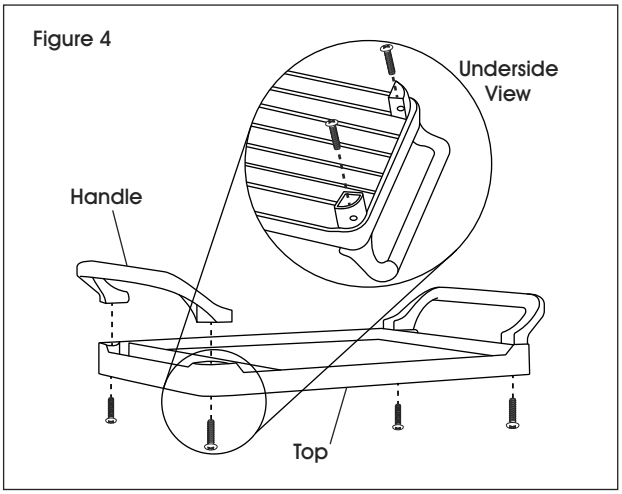

5. Connect top to uprights. (See Figure 5)